OZONE
FOR A SAFER WORLD

SECURITY SOLUTIONS

for Homes, Offices & Commercial Spaces

Edition #1.1 | 2023-24



Fingerprint Locks



Furniture Locks



Smart Devices



Safes

MRP w.e.f. 18th April'23

About Ozone

Everything starts with a purpose. We did too. Ozone – For a Safer World.

Two decades later, with a larger team and business verticals, we have successfully ventured into Safety, Security, and Hardware solutions – for Residential and Commercial establishments.

Ozone offers new-age Security Solutions consisting of Digital Locks, Digital Safes, & IoT-based products suitable for Homes, Offices, Hospitals, Hotels & Other Commercial Establishments.

The range offers convenience and familiarity to the users through multi-authentication modes, i.e., Fingerprints, User Passwords, RFID Cards, Emergency keys, and a user-friendly app.

- For Residential & Commercial Use
- 24 Months Warranty
- Remote Access
- 24*7 Security Solutions
- Anti-Theft Technology
- Contactless Operations
- Bluetooth Unlock
- Google/Alexa Enabled

SECURITY
SOLUTIONS

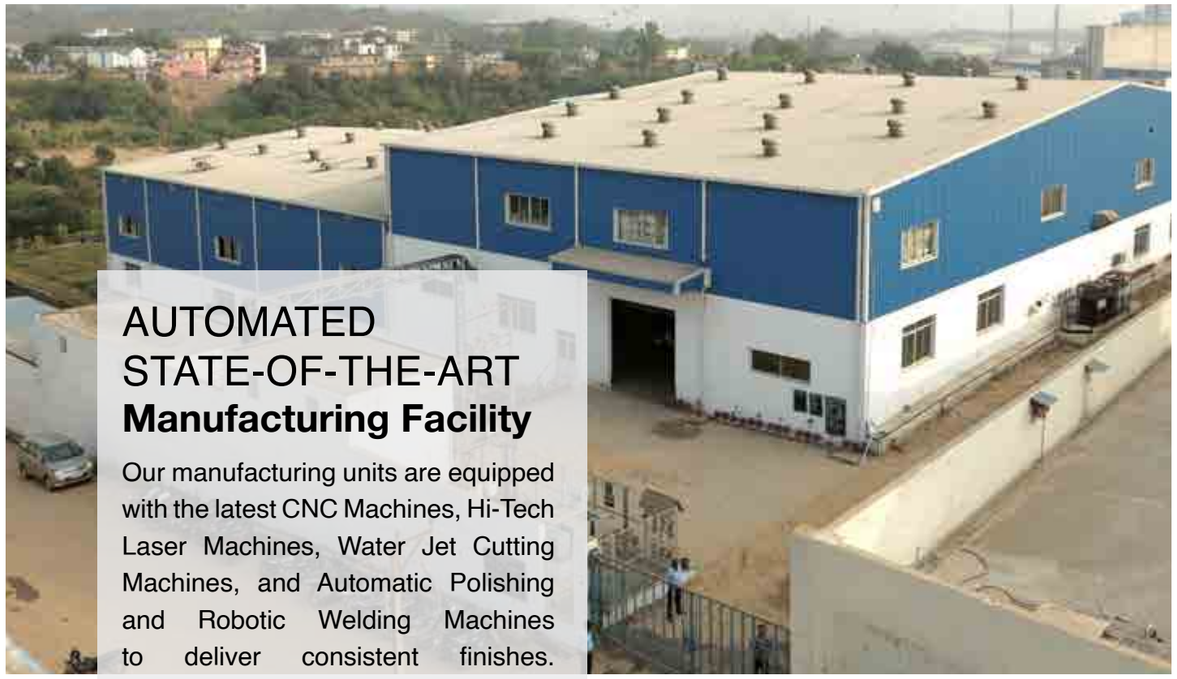

AUTOMATED STATE-OF-THE-ART **Manufacturing Facility**

Our manufacturing units are equipped with the latest CNC Machines, Hi-Tech Laser Machines, Water Jet Cutting Machines, and Automatic Polishing and Robotic Welding Machines to deliver consistent finishes. All units have unique operations that work together continuously at maximum efficiency. Each product is checked for quality and perfection, ensuring the highest level of customer satisfaction.

Scan QR Code for Manufacturing Facility

Location:

Kala Amb
Himachal Pradesh
India



VMC (Vertical Machine Centre)



Polishing Machine



CNC Punching Machine

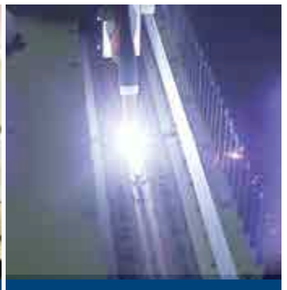

Welding Centre

Ozone Product Range

Our product portfolio offers more than 5000 SKUs, divided into nine broad categories.

OZONE SECUTECH

FINGERPRINT LOCKS™
Fingerprint Locks





SMART DEVICES™



SAFES™
Digital Safes



ARCHITECTURAL HARDWARE

GLASSAGE® SERIES
Glass Fittings



HANA
Demountable Partitioning Systems



SERIES™ DOORCONTROL
Door Hardware



SERIES™ OZO MOTION
Automatic Doors



ERGOZONE®
Kitchen & Furniture Fittings





- Railing
Railing Solutions





OZONE FOR A SAFER WORLD

INDEX...

Fingerprint Locks	**01-48**
Morphy Series	
Oracle Series	
Cleo Smart Series	
Narrow Style Series	
Electric Rim Series	
Glass Door Lock Series	
Pad Lock	
Furniture Locks	**49-68**
Password, Fingerprint, & Key Lock	
RFID, Fingerprint, & Password Lock	
Smart Devices	**69-82**
Video Door Phone	
Smart Video Door Bell	
Smart Camera	
Smart Plug	
Safes	**83-134**
Fireproof Series	
Notify Safes	
Safilo Bio Series	
Safilo Digital Safes	
Laptop Safes	
Convenio Series	
Jade Black Series	
Tusker Series	
Secret Safes	
Ezee Series	
Guardian Series	
Hazard Storage Lockers Safes	











SECURITY SOLUTIONS

Our range of Next Generation Video Door Phones, Smart Cameras & Doorbells come with a pre-installed rotation base that enables 360 degrees view of the area.

Additionally, Infrared LED illuminators enable night vision to the camera for the perfect night vision and are accessible through Google Nest and Alexa Voice assistant for a convenient approach.

OZONE SECURITY SYSTEM

SECURITY MADE EASY.
Full suite of home products for every customer's needs.



INTERNAL FINGERPRINT LOCK



FURNITURE LOCK (FINGERPRINT & PASS-WORD)



EXTERNAL FINGERPRINT LOCK



SMART DOOR BELL



SMART CAMERA



VIDEO DOOR PHONE



FURNITURE LOCK (FINGERPRINT)



OzoLife App

For Remote operation (Bluetooth Model)



= Remotely Unlock



HOME & OFFICE SAFES



FIXED SMART CAMERA



FURNITURE LOCK (PASSWORD)



SMART PLUGS

SECURITY
SOLUTIONS

www.ozone-india.com





Digital Door Locks

- Morphy Series
- Oracle Series
- Cleo Smart Lock
- Narrow Style Lock
- Trinity Lock
- Rim Lock
- Glass Door Lock

Bring home the readily available key – YOUR FINGERPRINT

Ease of operation and convenience of use is the modern mantra of living. Remove the hassle of keys in a living space and be confident with our range of Digital Locks that can be installed on any door, be it glass, wooden, or metal.

Biometric fingerprints can operate these locks or a simple Password, RFID card, or even a user-friendly app on a smartphone that enables operating the lock from a remote location.

FINGERPRINT LOCKS

Make your life easier than ever













*Lock features varies according to models
*Requires internet connectivity for this feature

MORPHY SERIES



Specifications

Smart Feature:	Anti-Theft Password I Lithium-ion & Rechargeable Battery I Smart Freeze I USB for Battery Backup I Doorbell I Mortised locking & unlocking I Volume Setting Dual Combination Mode I Remote Location Unlocking I Night Latch
Password:	8 ~15 digits number combination
Door Thickness:	35~80mm
Power:	(7.4v 4200 mAh) Lithium-ion & Rechargeable Battery with 5.2v/2A USB Charger
Battery Life:	Approx. 3500 Open & Close Operations
Types of Password :	Timed I Permanent

Access Modes	**Registration**
Fingerprint	Upto 100 Nos.
RFID	Upto 100 Nos.
Password	Upto 100 Nos.

Access Modes



User Access Rights



Alarms



Connectivity





MORPHY NXT PLUS

OZ-FDL-01 LIFE NXT PLUS ₹ 35,990

OZ-FDL-01 LIFE NXT PLUS RG ₹ 36,500

OZ-FDL-01 LIFE NXT PLUS AC ₹ 36,500

For External Doors

Application: Wooden Doors | Metal Doors

OzoLife App

Finish:

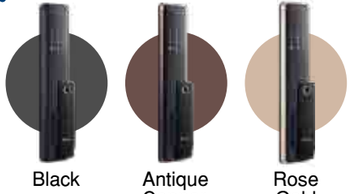

Black | Antique Copper | Rose Gold

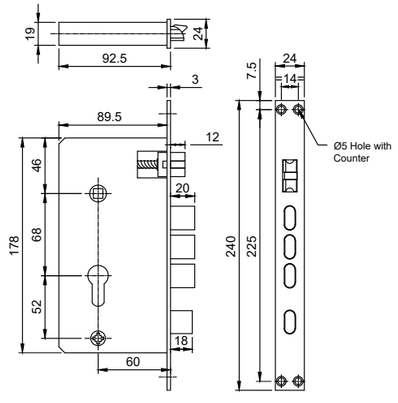

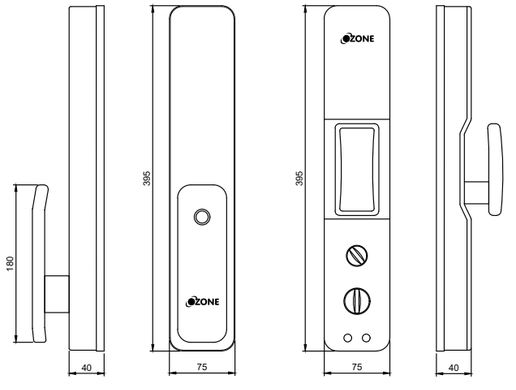

FRONT SIDE BACK SIDE

Disclaimer: The features may differ as per the product model.

FINGERPRINT LOCKS

MORPHY SERIES



Specifications

Smart Feature:	Passage Mode I Anti-Theft Password Audit Trail I Low Power Consumption Smart Freeze I USB for Battery Backup Volume Setting I Dual Combination Mode Universal Handle I Doorbell I Privacy Locking Remote Location Unlocking I Night Latch
Password:	8 ~15 digits number combination
Door Thickness:	35~80mm
Power:	AA Alkaline battery X 4 (DC 6V)
Battery Life:	Approx. 3500 Open & Close Operations
Types of Password :	OTP I Timed I Cyclic I Permanent I Dynamic

Access Modes	**Registration**
Fingerprint	Upto 50 Nos.
RFID	Upto 50 Nos.
Password	Upto 50 Nos.

Access Modes



User Access Rights



Alarms



For Remote operation (Bluetooth Model)

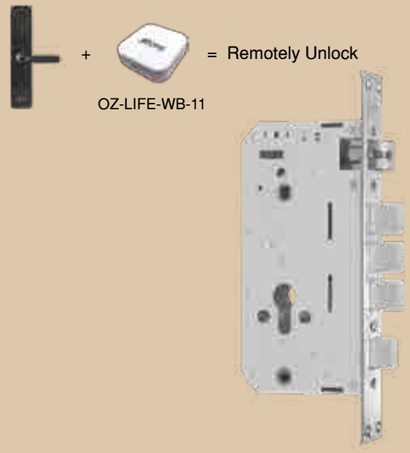



MORPHY NXT

OZ-FDL-01 LIFE NXT ₹ 32,500

OZ-FDL-01 LIFE NXT RG ₹ 32,990

For External Doors

Application: Wooden Doors | Metal Doors

OzoLife App

Finishes:



Black/ Grey

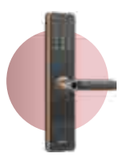

Black/ Rose Gold

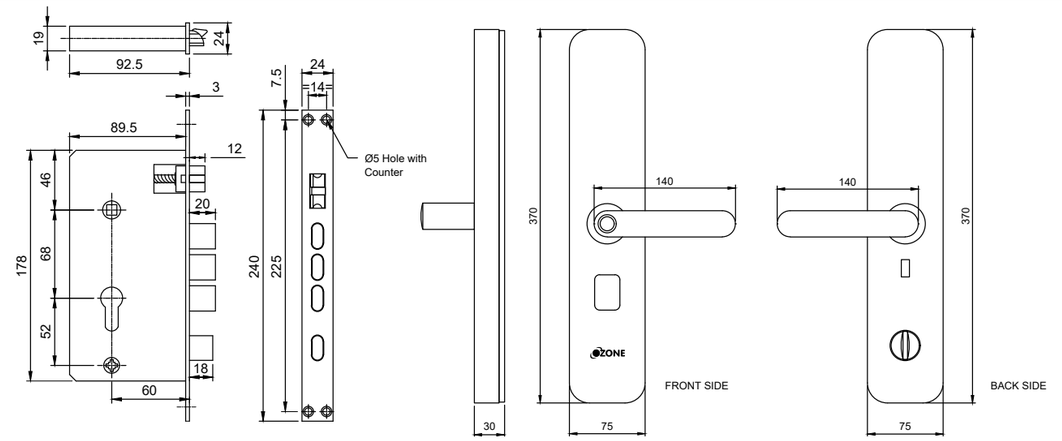

Disclaimer: The features may differ as per the product model.

SECURITY
SOLUTIONS

FINGERPRINT LOCKS

www.ozone-india.com

SPEEDY SERIES



Specifications

Smart Feature:	Passage Mode I Anti-Theft Password Audit Trail I Low Power Consumption Smart Freeze I USB for Battery Backup Volume Setting I Dual Combination Mode Universal Handle I Privacy Locking Remote Location Unlocking
Password:	8 ~15 digits number combination
Door Thickness:	35~80mm
Power:	AAA Alkaline battery X 4 (DC 6V)
Battery Life:	Approx. 3500 Open & Close Operations
Types of Password :	Timed I Permanent

Access Modes	**Registration**
Fingerprint	Upto 50 Nos.
RFID	Upto 50 Nos.
Password	Upto 50 Nos.

Access Modes



User Access Rights



Alarms





MORPHY LIFE LITE

OZ-FDL-01 LITE* ₹ 12,990

OZ-FDL-01 LIFE LITE ₹ 14,990

For External Doors

Application: Wooden Doors | Metal Doors

OzoLife App

Finish:



Black

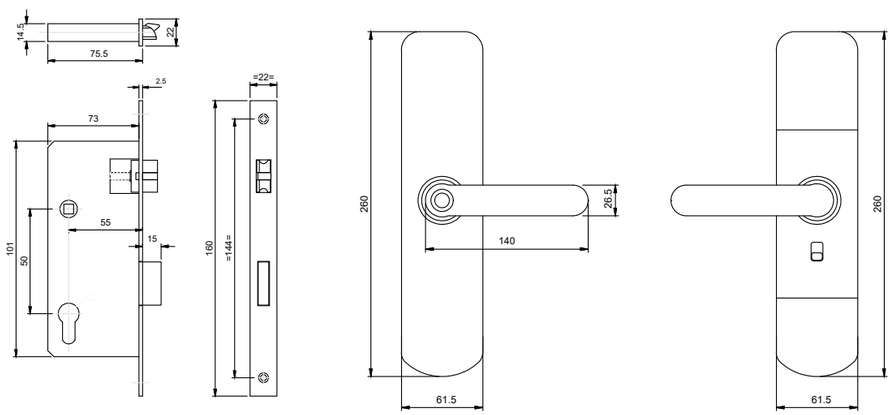

*Please Note: This product variant doesn't support OzoLife App.

Disclaimer: The features may differ as per the product model.

SECURITY
SOLUTIONS

FINGERPRINT LOCKS

SPEEDY SERIES



Specifications

Smart Feature:	Auto Locking I Anti-Theft Password I Smart Freeze I USB for Battery Backup I Volume Setting Dual Combination Mode I Pull/Push Design I Passage Mode I Privacy Locking I Door Bell
Password:	8 ~15 digits number combination
Door Thickness:	35~80mm
Power:	AA Alkaline battery X 4 (DC 6V)
Battery Life:	Approx. 3500 Open & Close Operations
Types of Password :	OTP I Timed I Cyclic I Permanent I Dynamic

Access Modes	**Registration**
Fingerprint	Upto 50 Nos.
RFID	Upto 50 Nos.
Password	Upto 50 Nos.

Access Modes

Fingerprint | User Password | Mobile App | RFID Card | Emergency Key

User Access Rights

Admin | User | Guest

Alarms

Low Battery Notification | Auto Secure | Break-in

For Remote operation (Bluetooth Model)

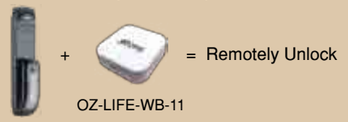

\+ = Remotely Unlock

OZ-LIFE-WB-11



UNIQ SMART DOOR LOCK

OZ-FDL-05 LIFE STD ₹ 22,990

For External Doors

Application: Wooden Doors | Metal Doors

OzoLife App

Finish:



Black

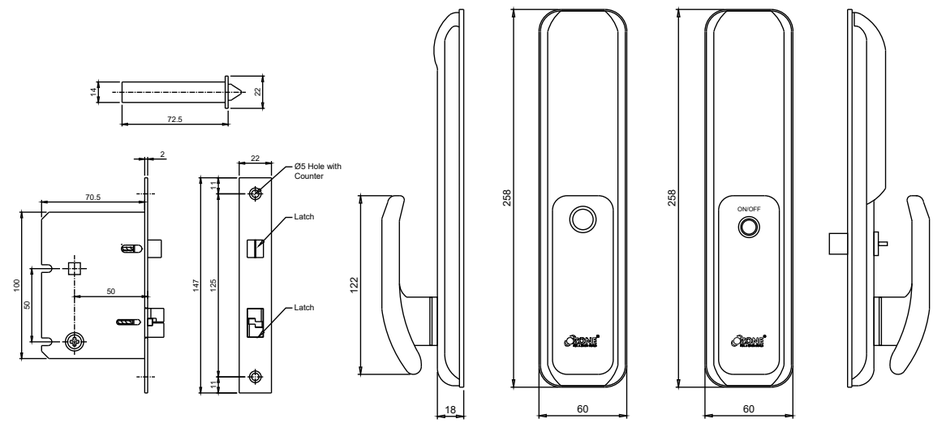

Disclaimer: The features may differ as per the product model.

FINGERPRINT LOCKS

MORPHY SERIES



Specifications

Smart Feature:	Passage Mode I Anti-Theft Password Audit Trail I Low Power Consumption Smart Freeze I USB for Battery Backup Volume Setting I Dual Combination Mode Universal Handle I Doorbell I Privacy Locking Remote Location Unlocking
Password:	6 ~15 digits number combination
Door Thickness:	35~80mm
Power:	AA Alkaline battery X 4 (DC 6V)
Battery Life:	Approx. 3500 Open & Close Operations
Types of Password :	OTP I Timed I Permanent I Cyclic I Dynamic

Access Modes	**Registration**
Fingerprint	Upto 25 Nos.
RFID	Upto 25 Nos.
Password	Upto 25 Nos.

Access Modes

Fingerprint | User Password | Mobile App | RFID Card | Emergency Key

User Access Rights

Admin | User | Guest

Alarms

Low Battery Notification | Auto Secure

Connectivity

Wi-Fi Frequency 2.4Ghz Only

For Remote operation (Bluetooth Model)



\+



OZ-LIFE-WB-11

= Remotely Unlock





MORPHY ECO

OZ-FDL-04 STD* ₹ 15,990

OZ-FDL-04 LIFE BL ₹ 17,990

OZ-FDL-04 LIFE ₹ 17,990

For External Doors

Application: Wooden Doors | Metal Doors

OzoLife App

*Please Note: This product variant doesn't support OzoLife App.

Finishes:



Black/
Satin Chrome



Black/
Antique Bronze

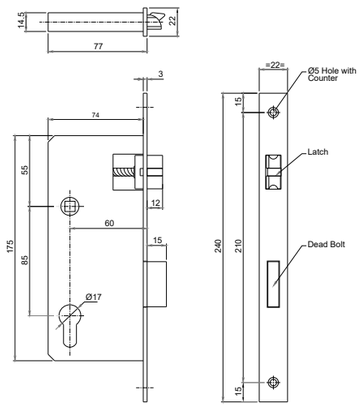

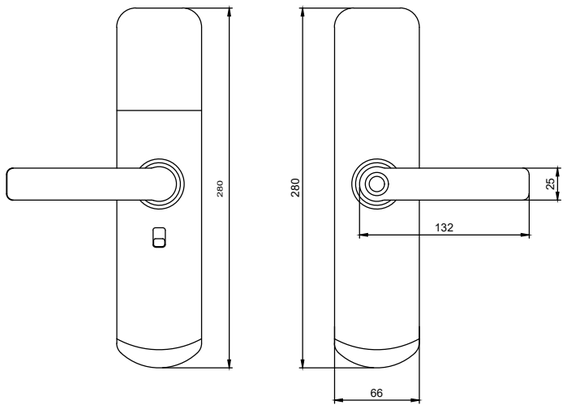

Disclaimer: The features may differ as per the product model.

MORPHY SERIES



Specifications

Smart Feature:	Passage Mode I Anti-Theft Password Audit Trail I Night Latch I Smart Freeze USB for Battery Backup I Volume Setting Dual Combination Mode* I Universal Handle Remote Location Unlocking I Low Power Consumption I Google Assistant I Alexa
Password:	6 ~15 digits number combination
Door Thickness:	35~100mm
Power:	AA Alkaline battery X 4 (DC 6V)
Battery Life:	Approx. 3500 Open & Close Operations
Types of Password :	OTP I Timed I Permanent I Cyclic I Dynamic

Access Modes	**Registration**
Fingerprint	*Upto 200 Nos.
RFID	*Upto 500 Nos.
Password	*Upto 500 Nos.

Access Modes



User Access Rights



Alarms



For Remote operation (Bluetooth Model)

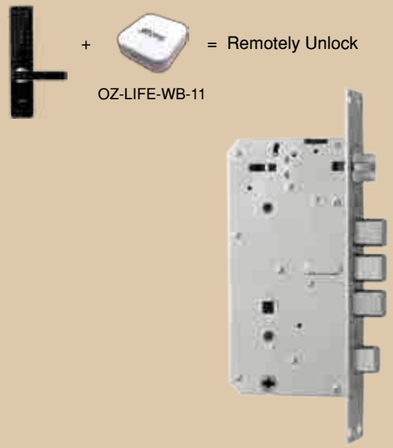



MORPHY PLUS

OZ-FDL-01 STD* ₹ 26,500

OZ-FDL-01 LIFE STD BLACK ₹ 31,570

OZ-FDL-01 LIFE STD AB ₹ 32,090

For External Doors

Application: Wooden Doors | Metal Doors

OzoLife App

Works with Google Assistant

Works with Alexa

*Please Note: This product variant doesn't support OzoLife App.

Finishes:



Black/ Satin Chrome



Black/ Antique Bronze

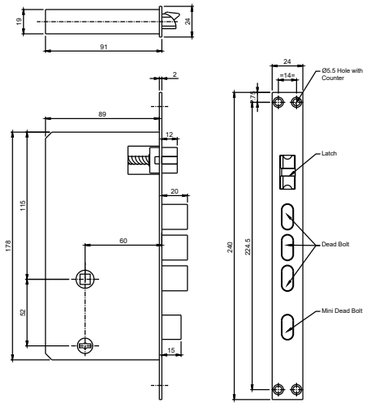

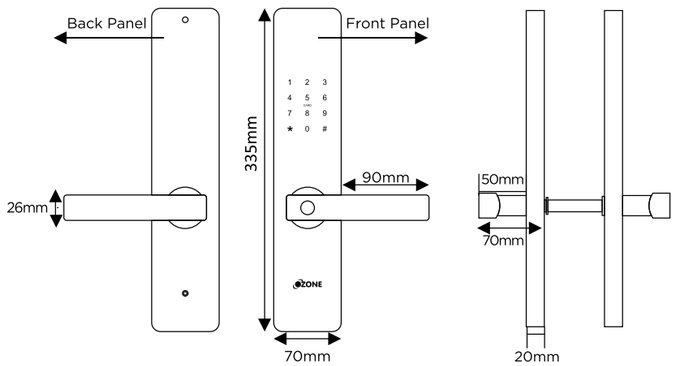

Disclaimer: The features may differ as per the product model.

FINGERPRINT LOCKS

MORPHY SERIES



Specifications

Smart Feature:	Passage Mode I Anti-Theft Password Audit Trail I Low Power Consumption Smart Freeze I USB for Battery Backup Google Assistant I Alexa I Volume Setting Dual Combination Mode* I Universal Handle I Remote Location Unlocking
Password:	6 ~15 digits number combination
Door Thickness:	35~100mm
Power:	AA Alkaline battery X 4 (DC 6V)
Battery Life:	Approx. 3500 Open & Close Operations
Types of Password :	OTP I Timed I Permanent I Cyclic I Dynamic

Access Modes	**Registration**
Fingerprint	*Upto 200 Nos.
RFID	*Upto 500 Nos.
Password	*Upto 500 Nos.

Access Modes

Fingerprint | User Password | Mobile App | RFID Card | Emergency Key

User Access Rights

Admin | User | Guest

Alarms

Low Battery Notification | Auto Secure | Break-in

For Remote operation (Bluetooth Model)

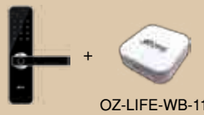

+ = Remotely Unlock

OZ-LIFE-WB-11

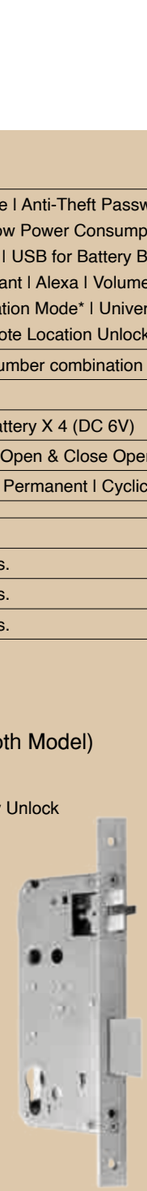



MORPHY M

OZ-FDL-02 STD* ₹ 23,500

OZ-FDL-02 LIFE STD ₹ 28,360

For External Doors

Application: Wooden Doors | Metal Doors

OzoLife App | Works with Google Assistant | Works with Alexa

*Please Note: This product variant doesn't support OzoLife App.

Finishes:



Black/ Satin Chrome



Black/ Antique Bronze

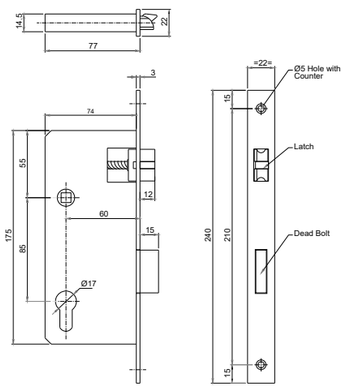

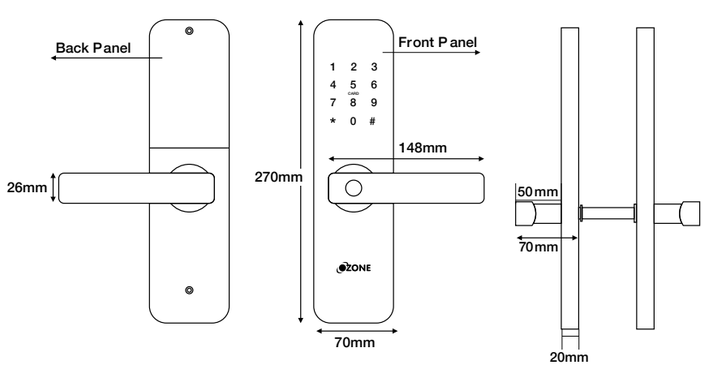

Disclaimer: The features may differ as per the product model.

ORACLE SERIES



Specifications

Smart Feature:	Passage Mode I Anti-Theft Password Audit Trail I Low Power Consumption Smart Freeze I USB for Battery Backup Google Assistant / Alexa I Privacy Locking
Password:	6 ~15 digits number combination
Door Thickness:	35~65mm
Power:	AA Alkaline battery X 4 (DC 6V)
Battery Life:	Approx. 3500 Open & Close Operations
Types of Password :	OTP I Timed I Permanent I Cyclic I Dynamic

Access Modes	**Registration**
Fingerprint	Upto 100 Nos.
RFID	Upto 30 Nos.
Password	Upto 30 Nos.

Access Modes

Fingerprint · User Password · Mobile App · RFID Card · Emergency Key

User Access Rights

Admin · User · Guest

Alarms

Low Battery Notification · Auto Secure

Others

2 Keys Available

For Remote operation (Bluetooth Model)



\+



OZ-LIFE-WB-11

= Remotely Unlock

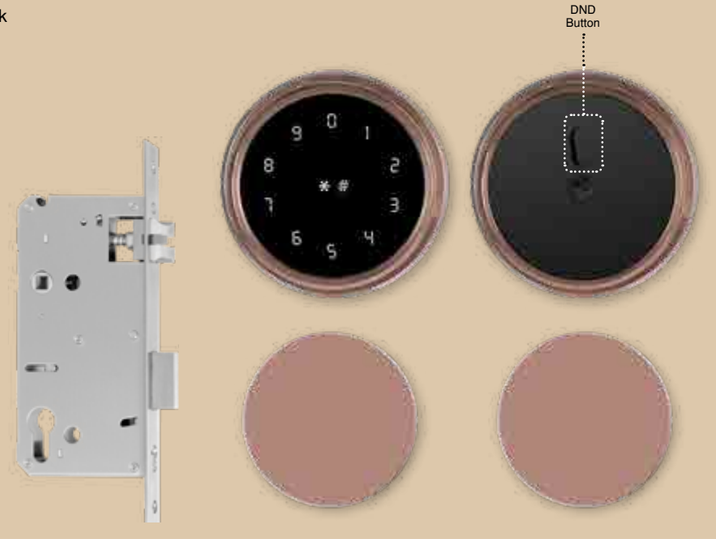

ORACLE

OZ-FDL-11-R-LIFE ₹ 21,950

For Internal Doors

Application: Wooden Doors

OzoLife App · Works with Google Assistant · Works with Alexa

Finishes:



Black · Bronze · Gold

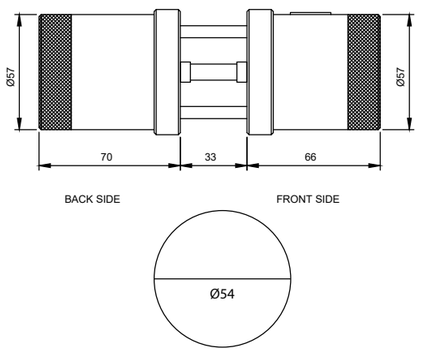

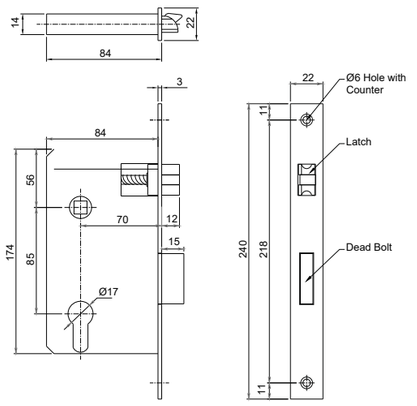

Disclaimer: The features may differ as per the product model.

ORACLE SERIES



Specifications

Smart Feature:	Passage Mode I Anti-Theft Password I Audit Trail I Low Power Consumption Smart Freeze I USB for Battery Backup Google Nest / Alexa I Privacy Locking
Password:	6 ~15 digits number combination
Door Thickness:	35~65mm
Power:	AA Alkaline battery X 4 (DC 6V)
Battery Life:	Approx. 3500 Open & Close Operations
Types of Password :	OTP I Timed I Permanent I Cyclic I Dynamic

Access Modes	**Registration**
Fingerprint	Upto 100 Nos.
RFID	Upto 30 Nos.
Password	Upto 30 Nos.

Access Modes



User Access Rights



Alarms

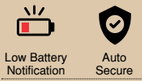

For Remote operation (Bluetooth Model)

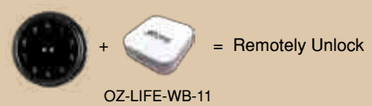



ORACLE

OZ-FDL-11-LIFE ₹ 20,990

For Internal Doors

Application: Wooden Doors

OzoLife App

Works with Google Assistant

Works with Alexa

Finishes:



Black Bronze Gold

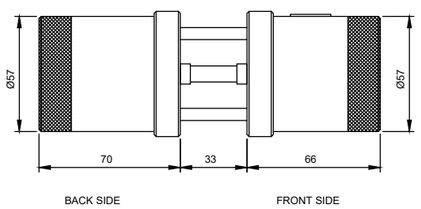

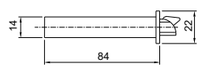

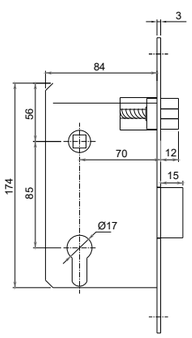

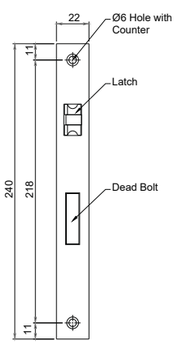

Disclaimer: The features may differ as per the product model.

ORACLE SERIES



Specifications

Smart Feature:	Passage Mode I Anti-Theft Password Audit Trail I Low Power Consumption Smart Freeze I USB for Battery Backup Google Assistant / Alexa I Privacy Locking
Password:	6 ~15 digits number combination
Door Thickness:	35~65mm
Power:	AA Alkaline battery X 4 (DC 6V)
Battery Life:	Approx. 3500 Open & Close Operations
Types of Password :	OTP I Timed I Permanent I Cyclic I Dynamic

Access Modes	**Registration**
Fingerprint	Upto 100 Nos.
RFID	Upto 30 Nos.
Password	Upto 30 Nos.

For Remote operation (Bluetooth Model)

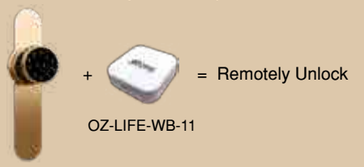

+ = Remotely Unlock

OZ-LIFE-WB-11

Access Modes



User Access Rights



Alarms



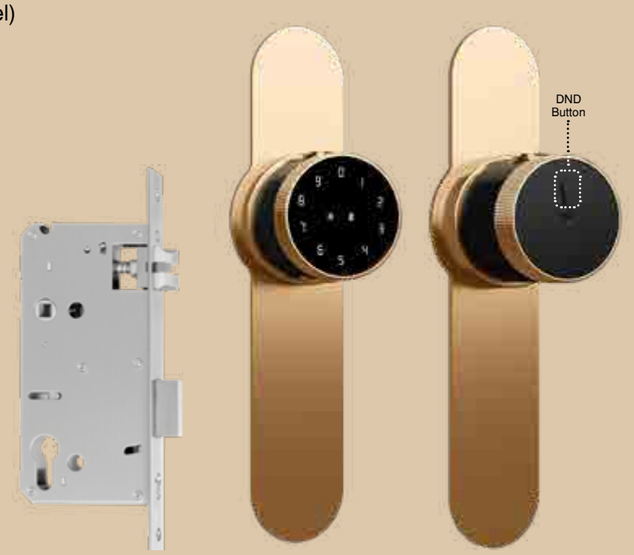

ORACLE

OZ-FDL-11-P-LIFE ₹ 22,800

For Internal Doors

Application: Wooden Doors

OzoLife App

Works with Google Assistant

Works with Alexa

Finishes:



AB

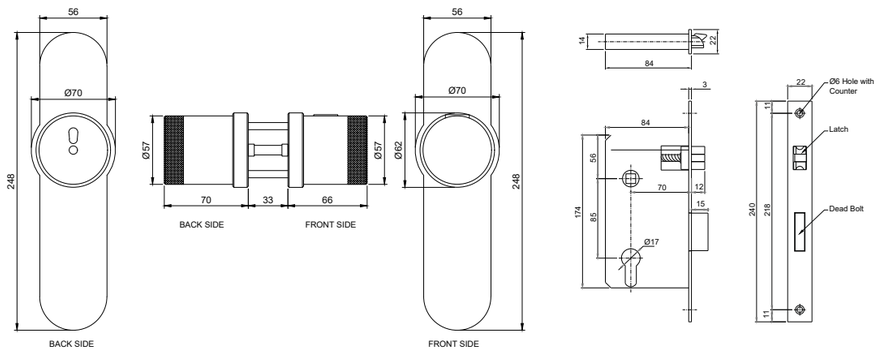

Disclaimer: The features may differ as per the product model.

CLEO SMART LOCK



Specifications

Smart Feature:	Auto Secure I Anti-Theft Password I Audit Trail I Low Power Consumption Smart Freeze I USB for Battery Backup Volume Setting I Auto Locking Remote Location Unlocking
Password:	6 ~15 digits number combination
Door Thickness:	20~65mm
Power:	AA Alkaline battery X 4 (DC 6V)
Battery Life:	Approx. 3500 Open & Close Operations
Types of Password :	Timed I Permanent

Access Modes	**Registration**
Fingerprint	Upto 100 Nos.
RFID	Upto 200 Nos.
Password	Upto 200 Nos.

Access Modes



User Access Rights



Alarms



Connectivity





CLEO SMART LOCK

OZ-DRL- LIFE STD ₹ 13,640

OZ-DRL- LIFE STD AB ₹ 14,270

For Internal Doors

Application: Wooden Doors | Metal Doors

OzoLife App

*Please Note: This product variant doesn't support OzoLife App.

Finishes:



Black/
Satin Chrome



Black/
Antique Bronze

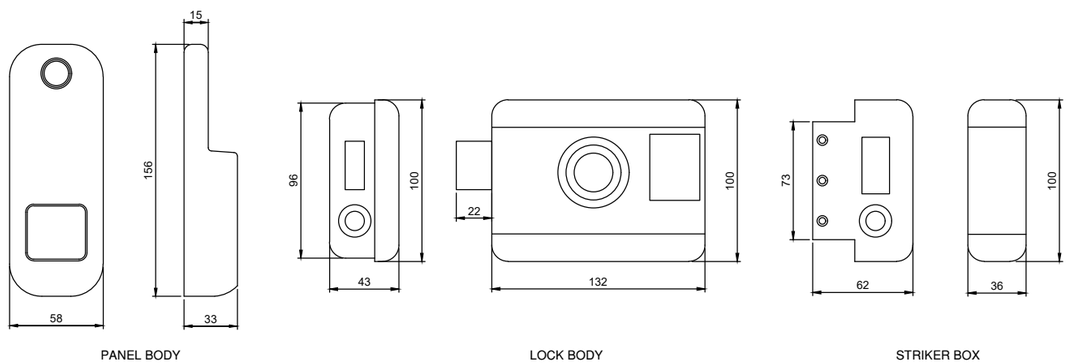

PANEL BODY

LOCK BODY

STRIKER BOX

Disclaimer: The features may differ as per the product model.

ELECTRIC RIM LOCK



Specifications

Voltage:	12V DC
Work Current:	2.5A
Electronics Status:	Require power to open only
Temperature Range:	-10°C ~50°C
Dimensions:	123*105*37MM

Access Modes

5 Computerized Dotted Keys

Specifications

Brass Double Cylinder

Solid Steel Lock Case with Stainless Steel Finish

Compatible with any Electric Access Control Solution

Tested for more than 500,000 Opreations



ELECTRIC RIM LOCK

OZ-ERL01- R* ₹ 3,400

OZ-ERL01- L* ₹ 3,400

For External/internal door

Application: Wooden Doors | Metal Doors

Finishes:



SS

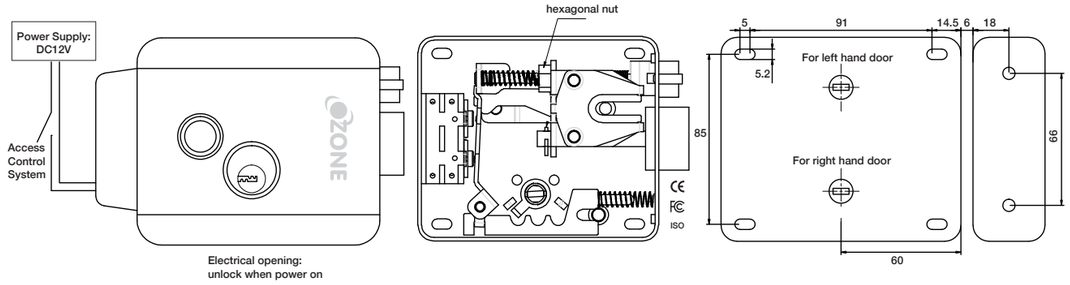

*Please Note: This product variant doesn't support OzoLife App.

Disclaimer: The features may differ as per the product model.

NARROW STYLE SERIES



Specifications

Smart Feature:	Suitable for both Sliding & Swing Door I Passage Mode I Anti-Theft Password Audit Trail I Low Power Consumption Dual Combination Mode* I Smart Freeze USB for Battery Backup I Privacy Locking
Password:	6 ~15 digits number combination
Door Thickness:	35~80mm
Power:	AAA Alkaline battery X 4 (DC 6V)
Battery Life:	Approx. 3500 Open & Close Operations
Types of Password :	Timed I Permanent I One Time I Cyclic

Access Modes	**Registration**
Fingerprint	Upto 100 Nos.
RFID	Upto 100 Nos.
Password	Upto 100 Nos.

Access Modes



User Access Rights



Alarms



Features

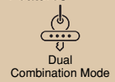



Sliding Doors

NARROW STYLE

OZ-FDL-33 LIFE SLN STD ₹ 23,990

For Internal Doors
Application: Wooden Doors | Metal Doors

OzoLife App

Finishes:



Black

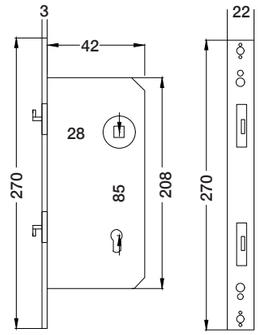

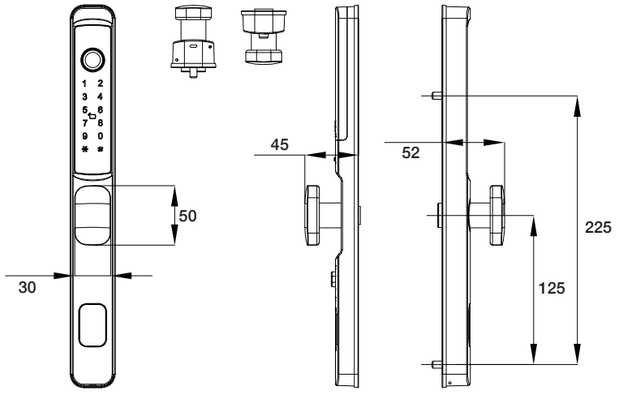

Disclaimer: The features may differ as per the product model.

NARROW STYLE SERIES



Specifications

Smart Feature:	Suitable for both Sliding & Swing Door I Passage Mode I Anti-Theft Password Audit Trail I Low Power Consumption Dual Combination Mode* I Smart Freeze USB for Battery Backup I Privacy Locking
Password:	6 ~15 digits number combination
Door Thickness:	35~80mm
Power:	AAA Alkaline battery X 4 (DC 6V)
Battery Life:	Approx. 3500 Open & Close Operations
Types of Password :	Timed I Permanent I One Time I Cyclic

Access Modes	**Registration**
Fingerprint	Upto 100 Nos.
RFID	Upto 100 Nos.
Password	Upto 100 Nos.

Access Modes

Fingerprint | User Password | Mobile App | RFID Card | Emergency Key

User Access Rights

Admin | User | Guest

Alarms

Low Battery Notification | Auto Secure | Smart Freeze | Break-in

Features

Dual Combination Mode



Swing Doors | Sliding Doors



NARROW STYLE

OZ-FDL-33 LIFE SW STD ₹ 23,990

For Internal Doors

Application: Wooden Doors | Metal Doors

OzoLife App

*Please Note: This product variant doesn't support OzoLife App.

Finishes:



Black

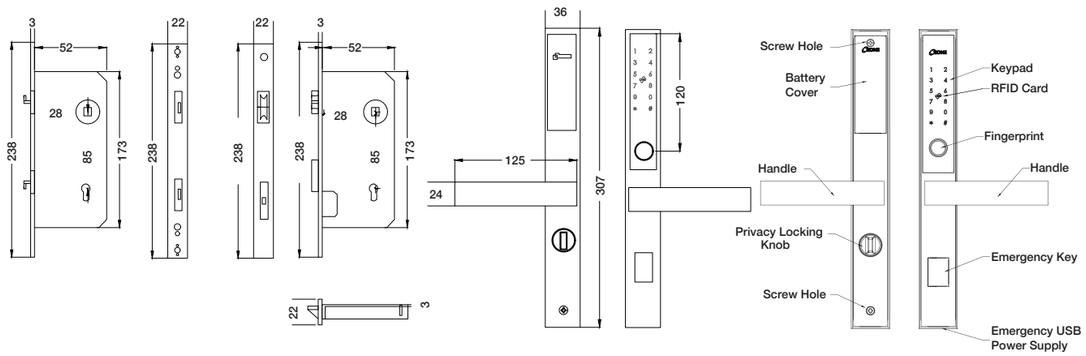

Disclaimer: The features may differ as per the product model.

NARROW STYLE SERIES



NARROW STYLE

OZ-FDL-33-60W STD ₹ 21,950

For External Doors
Application: Framed Aluminium Doors | Wooden Doors

*Please Note: This product variant doesn't support OzoLife App.

SECURITY
SOLUTIONS

FINGERPRINT LOCKS

Specifications

Smart Feature:	Passage Mode I Anti-Theft Password Audit Trail I Low Power Consumption Dual Combination Mode* I Smart Freeze USB for Battery Backup
Password:	6 ~15 digits number combination
Door Thickness:	35~60mm
Power:	AAA Alkaline battery X 4 (DC 6V)
Battery Life:	Approx. 3500 Open & Close Operations

Access Modes	**Registration**
Fingerprint	Upto 100 Nos.
RFID	Upto 100 Nos.
Password	Upto 100 Nos.

Access Modes



User Access Rights



Alarms



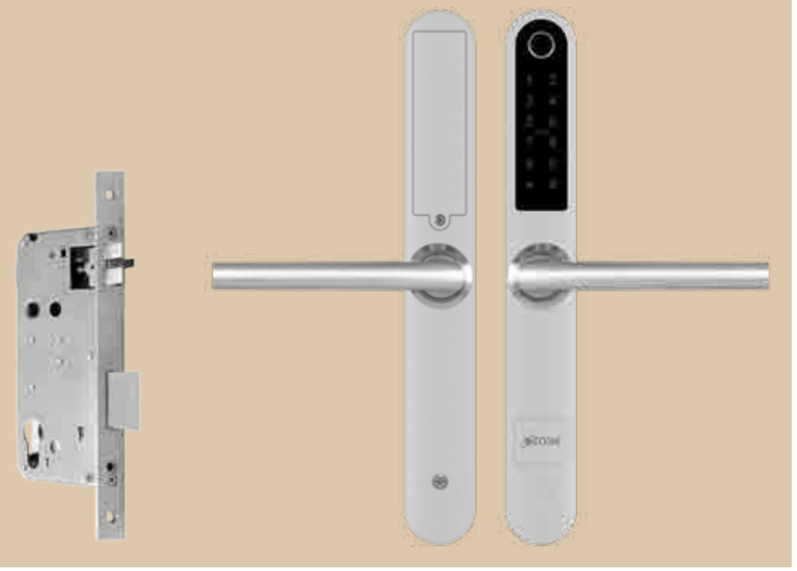

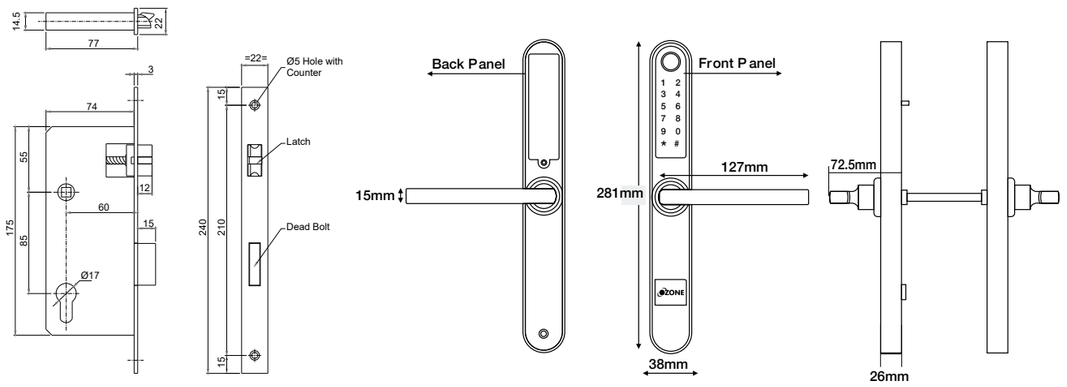

Disclaimer: The features may differ as per the product model.

APP CONNECTED GLASS DOOR LOCK

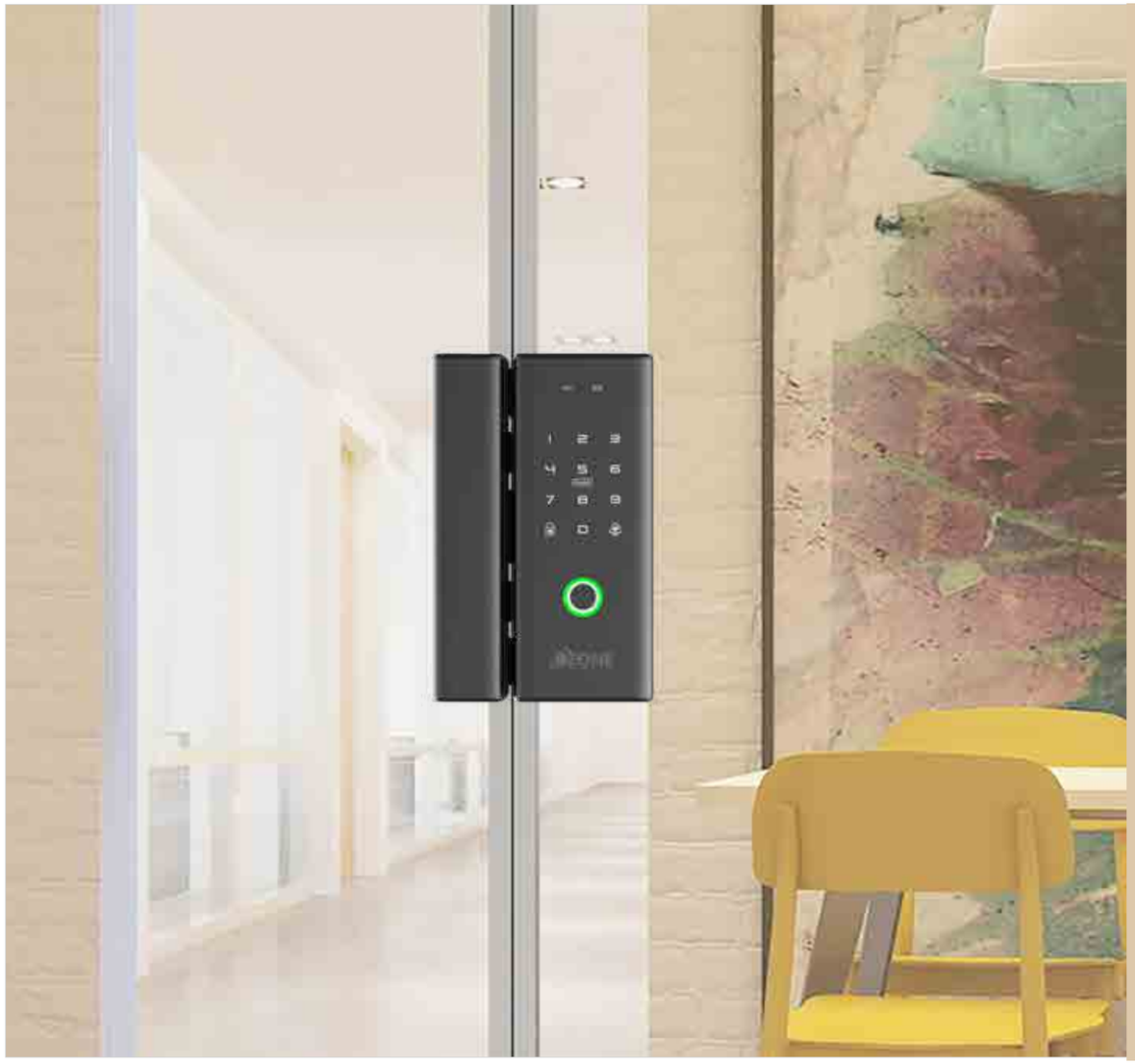

Specifications

Smart Feature:	Suitable for both Sliding & Swing Door I Passage Mode I Anti-Theft Password Automatic Locking I Smart Freeze 360° Fingerprint Recognition I Audit Trail
Password:	6 ~15 digits number combination
Door Thickness:	10-12mm for Glass 35-60mm for Wooden
Power:	AA Alkaline battery X 4 (DC 6V)
Battery Life:	Approx. 3500 Open & Close Operations
Types of Password :	Timed I Permanent

Access Modes	Registration
Fingerprint	Upto 200 Nos.
RFID	Upto 200 Nos.
Password	Upto 200 Nos.

Access Modes



User Access Rights



Alarms



Features





GLASS DOOR LOCK

OZ-FGL-LIFE-G2G ₹ 24,990
OZ-FGL-LIFE-G2W ₹ 24,490
OZ-FGL-LIFE-WD ₹ 24,990

For Internal Doors
Application: Glass-to-Glass Doors | Glass-to-Wall
Wooden Swing | Sliding door

OzoLife App

Finish:



Black

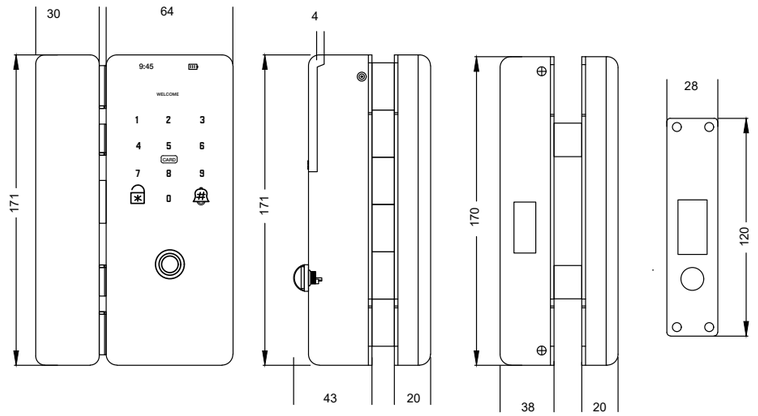

Disclaimer: The features may differ as per the product model.

FINGERPRINT LOCKS

TRINITY LOCK SERIES

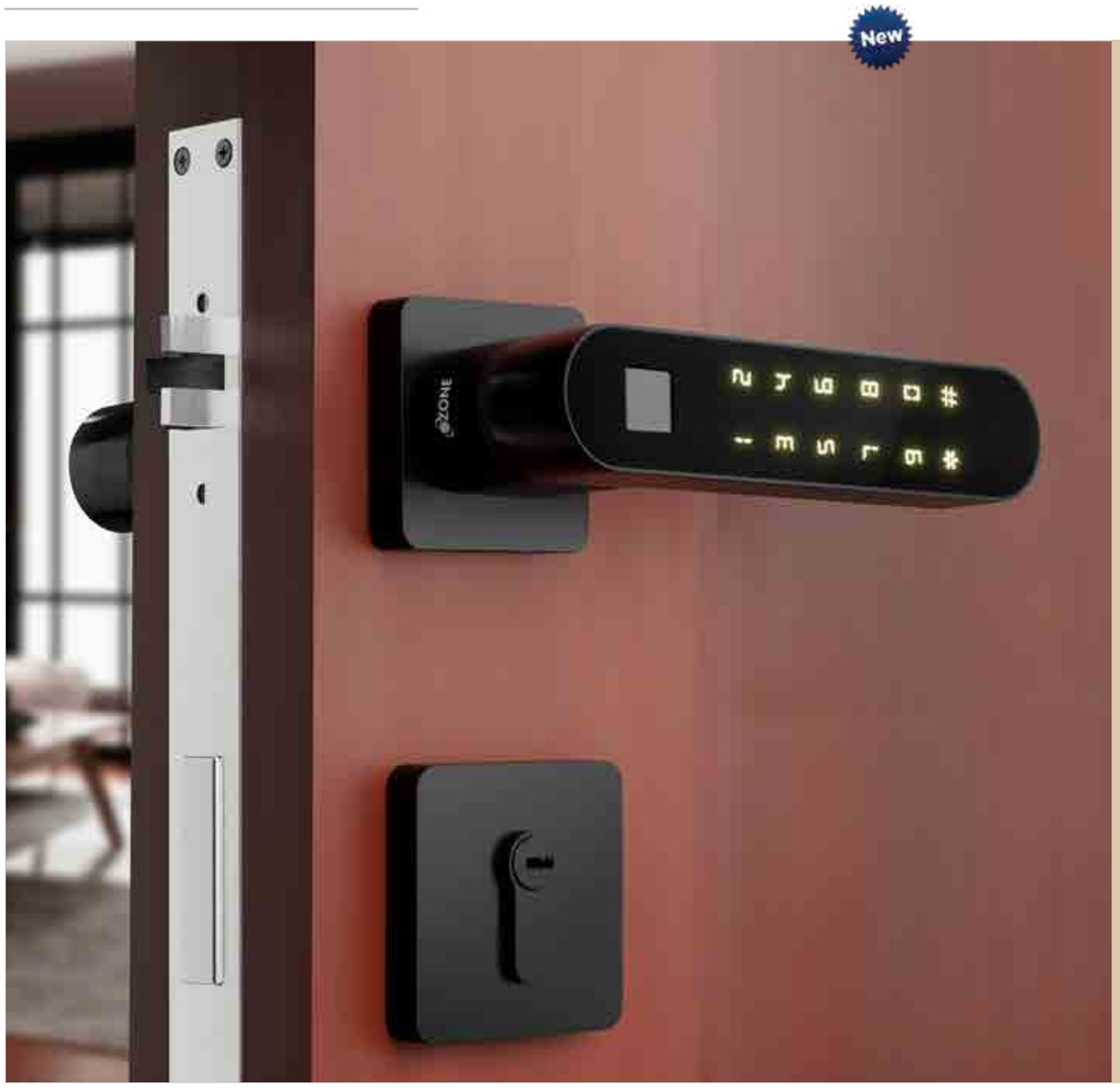

Specifications

Smart Feature:	Suitable for Swing Door I USB For Battery Backup Audit Trail I Low Power Consumption I Anti-Theft Password I Smart Freeze I Privacy Locking Universal Handle I Auto Secure I Auto Locking 360° Fingerprint Recognition I Passage Mode
Password:	6 ~15 digits number combination
Door Thickness:	35-65mm for Wooden
Power:	AAA Alkaline battery X 4 (DC 6V)
Battery Life:	Approx. 3500 Open & Close Operations
Handle Dimensions:	158*61*23MM
Types of Password:	Timed I Permanent I OTP I Cyclic I Dynamic

Access Modes

Fingerprint · User Password · Mobile App · Emergency Key

User Access Rights

Admin · User · Guest

Alarms

Low Battery Notification · Auto Secure

Access Modes	Registration
Fingerprint	Upto 30 Nos.
Password	Upto 100 Nos.

For Remote operation (Bluetooth Model)



\+ = Remotely Unlock

OZ-LIFE-WB-11



TRINITY LOCK

OZ-FDL-22 LIFE ₹ 16,990

OZ-FDL-22-R-LIFE ₹ 18,990

For Internal/External Doors

Application: Suitable for Wooden & Metallic door

OzoLife App

Finish:



Black

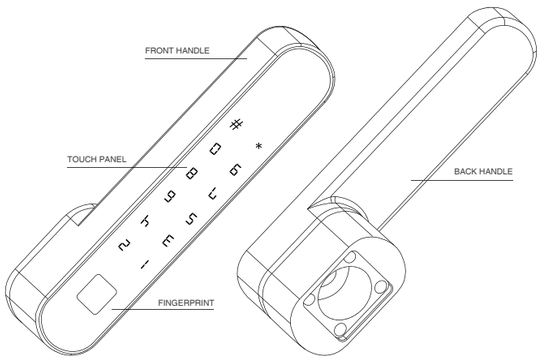

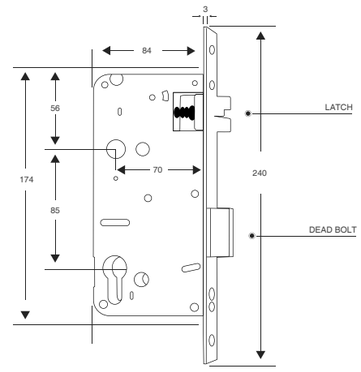

Disclaimer: The features may differ as per the product model.

IRIS VDP INTEGRATED SMART LOCK



Specifications

Smart Feature:	Door Bell Function I Smart Freeze I Anti-Theft Password I Universal Handle I USB Battery Backup I Auto Locking I Passage Mode I Night Latch I Capacitive Fingerprint Sensor I Remote Location Unlocking
Password:	4 ~9 digits number combination
Door Thickness:	35-110mm
Power:	A4(4 Pcs.)
Battery Life:	Approx. 3500 Open & Close Operations
Lock Material:	Aluminium Alloy + ABS
Types of Password:	Permanent I OTP I Cyclic I Password

Access Modes	Registration
RFID Card	Upto 25 Nos.
Fingerprint	Upto 25 Nos.
Password	Upto 25 Nos.

Access Modes

Fingerprint · User Password · Ozolok App Compatible · Emergency Key · RFID Card

VDP Compatible (Optional) · Remote (Optional)

User Access Rights

Admin · User · Guest

Alarms

Low Battery Notification · Auto Secure · Break-in Alarm

For Remote operation (Bluetooth Model)

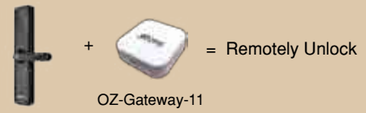

\+ OZ-Gateway-11 = Remotely Unlock

For Unlock With VDP (Optional)



\+ OZ-VDP ECO-03 + OFDL-IRIS-VDP-OL-TRM STD BLACK = VDP (Integration)

For Unlock With Remote (Optional)

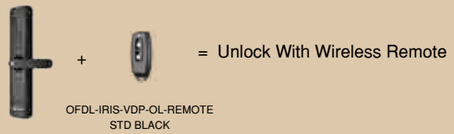

\+ OFDL-IRIS-VDP-OL-REMOTE STD BLACK = Unlock With Wireless Remote



IRIS LOCK

OFDL-IRIS-VDP-OL STD BLACK ₹ 24,990

For Internal/External Doors

Application: Suitable for Wooden & Metallic door

Finish:



Black

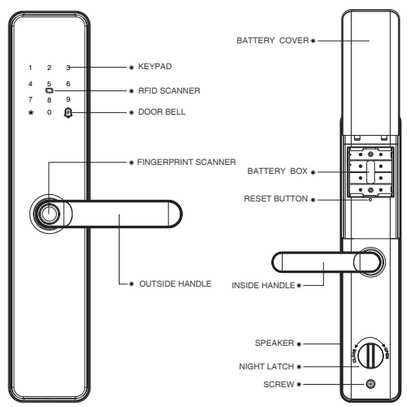

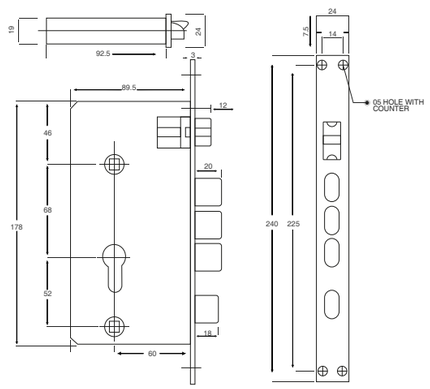

Disclaimer: The features may differ as per the product model.

PAD LOCK





PADLOCK
OZ-FPL-11-Black ₹ 6,650
Dimension: HxWxD - 142x114x25MM

Fingerprint

Emergency Key

OPTIONAL LOCK ACCESSORIES

GATEWAY
OZ-GATEWAY-11 ₹ 6,067
FOR OZOLOK PRODUCTS

OZ-LIFE-WB-11 ₹ 6,500
FOR OZOLIFE PRODUCTS



RFID CARD
OZEL-RF222/333-Card V10 White
₹ 146



GLASS DOOR LOCK REMOTE
OZDL-23 RC-GL ACC ₹ 3,150



GLASS DOOR LOCK REMOTE
OZ-FGL-LIFE-ACC-REMOTE
₹ 2,400



OFDL-IRIS-VDP-OL-REMOTE STD BLACK
₹ 2,400



OFDL-IRIS-VDP-OL-TRM STD BLACK ₹ 2,800



CLOUD-BASED SMART LOCK



ACCESS RIGHTS

A new perspective on home security, the range allows you to control multi-dimensional aspects of your home through Biometric fingerprints, a simple Password, RFID card, or a user-friendly App 'OzoLife' that enables operating the lock from a remote location; as per your specific lifestyle and at the leisure of your convenience.

ADMIN

The feature allows the Admin to create new admins, modify or delete the right of an existing admin and regular users, and perform various activities of regular and Admin users' accounts, including but not limited to resetting the product, accessing the settings and logs of the device.

REGULAR USERS

Regular users can access the product through pre-defined access modes. However, they cannot perform the rights of an Admin, such as adding or deleting users, resetting the product, etc.

GUEST RIGHTS

Guest users can access the product through the One-Time generated Password. The password is valid for a certain period and cannot be reused by the guest(s).

ALARM

LOW ALARM BATTERY

The device triggers an alarm if the battery comes below a predefined voltage threshold of 4.8V reminding users to replace batteries days prior to the estimated discharged period.

DOOR NOT LOCKED ALARM

The device will trigger the alarm if the deadbolt is not properly engaged and the door remains open.

BREAK-IN ALARM

The devices will trigger the alarm and alert the user if there's an attempted break-in.

AUTO SECURE ALARM

The device will activate the alarm and disable the keypad on consecutive incorrect authentication attempts for a specified amount of time.

LOCKING MODES

Every lock has two main functions – closing the door through a latch and locking the door through a deadbolt. Ozone's range of digital door locks brings additional security through a host of locking modes for different types of users.

AUTO LOCKING MODE

This mode makes sure the door gets locked automatically within 3-15 seconds after it closes as per user defined instruction.

PRIVACY LOCKING MODE

The Privacy Mode can be used to restrict access to your home. Once it is activated the door cannot be opened by any other user. Only the Admin and the Emergency Key can open it.

PASSAGE MODE

Passage Mode enables manual locking in areas which does not require locking everytime it is accessed, so that the door does not get locked every time it shuts and gives user the convenience of opening lock without authentication.

SMART FEATURES

- Dual Combination Mode
- Audit Trail
- Multiple User Access
- Low Power Consumption
- Anti-Theft Password
- USB for Power Supply

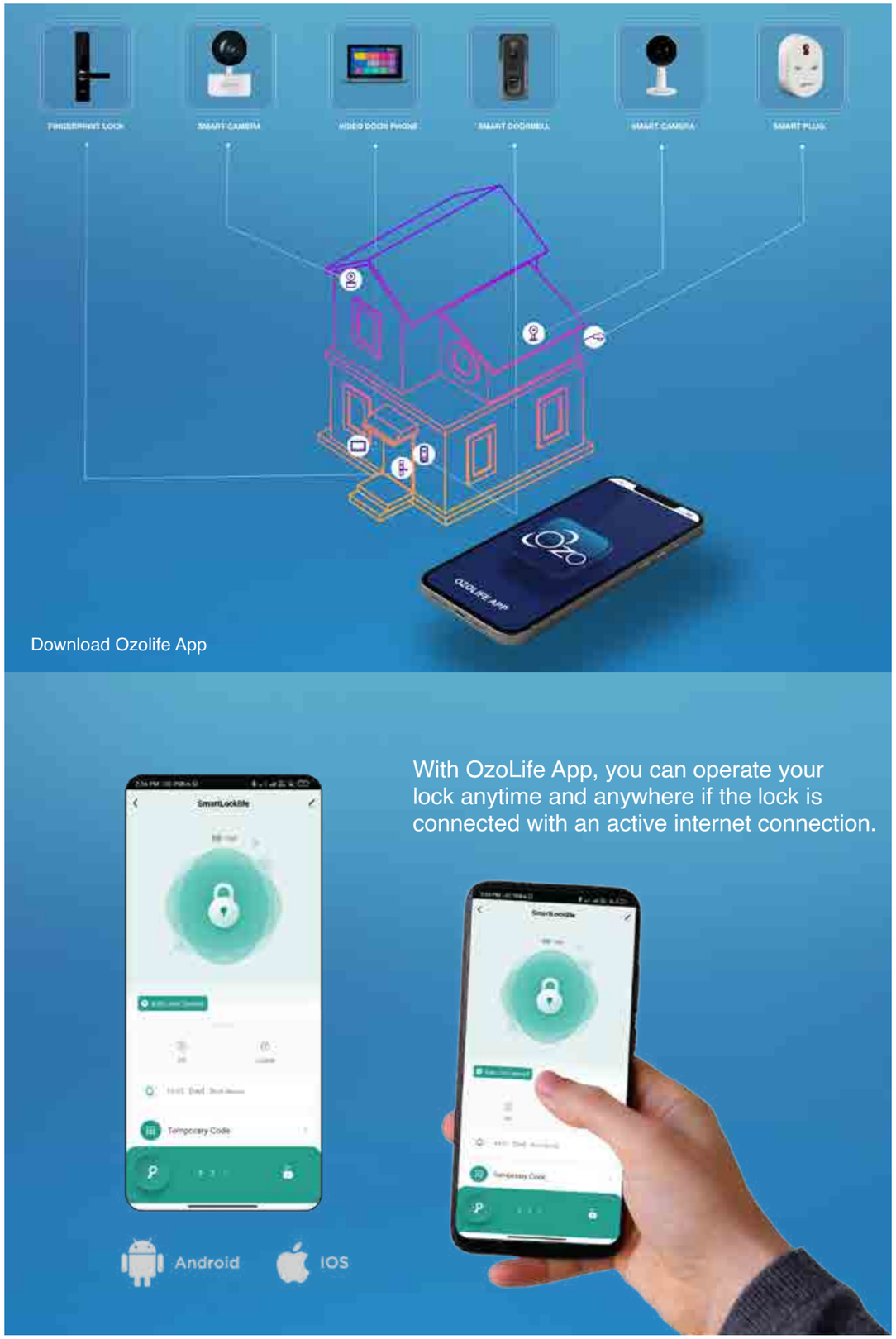
FINGERPRINT LOCK
SMART CAMERA
VIDEO DOOR PHONE
SMART DOORBELL
SMART CAMERA
SMART PLUG
OZOLIFE APP
Download Ozolife App
With OzoLife App, you can operate your lock anytime and anywhere if the lock is connected with an active internet connection.
SmartLockLife
Temporary Code
Android
IOS


OZONE
FOR A SAFER WORLD
SECURITY
SOLUTIONS
IT'S NOT
JUST
SECURITY.
IT'S
SECURITY
MADE EASY
Multiple Access Modes
Fingerprint
New Password
RFID Card
Emergency Key
Voice Control
Download
OzoLife App





Digital FURNITURE Locks

A Keyless way to Secure Your Valuables

Not only doors, but we also offer a range of Digital Furniture Locks that can be operated via password, biometric, fingerprint, or both, eliminating the need to carry a bunch of keys everywhere.

You can access these locks using your finger. These locks can be installed in all hinged and pull-out drawers.

Additionally, they can be operated via biometric, RFID card or a simple password or a hassle-free mode of access on the go.

FURNITURE LOCKS

PASSWORD & KEY LOCK



OZFL-301V-PK ₹ 2,910

Password & Key Lock
For Wooden / Metal Cabinets & Wardrobes
Door Thickness: 1-18mm

Master Password

User Password

Emergency Key



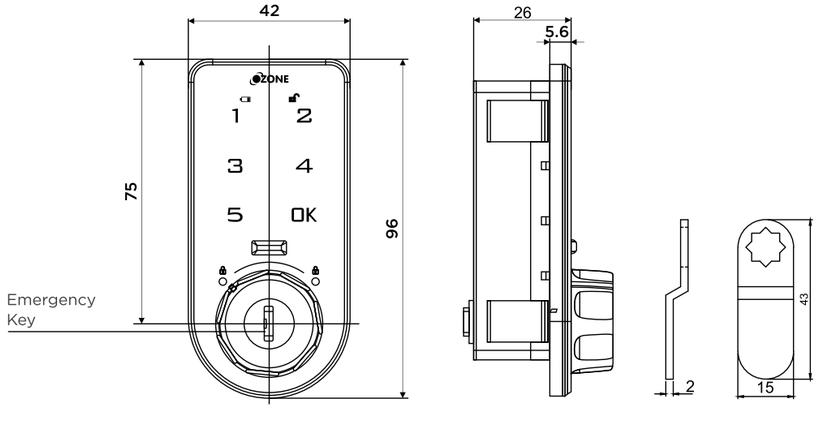

SECURITY
SOLUTIONS

PASSWORD & KEY LOCK



OZFL-301H-PK ₹ 2,910

Password & Key Lock
For Wooden / Metal Cabinets & Wardrobes
Door Thickness: 1-18mm

Master Password

User Password

Emergency Key



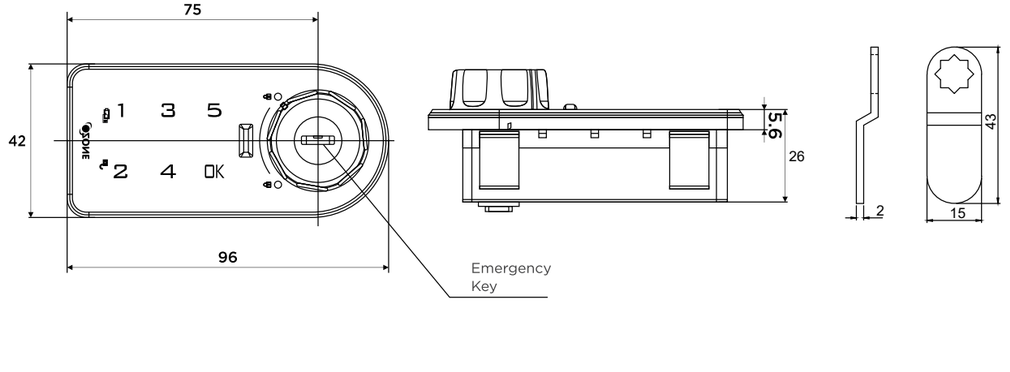

FURNITURE LOCKS

FINGERPRINT & KEY LOCK



OZFL-302-FK ₹ 4,820

Fingerprint & Key Lock
For Wooden / Metal Cabinets & Wardrobes
Door Thickness: 1-18mm



Fingerprint

Emergency Key

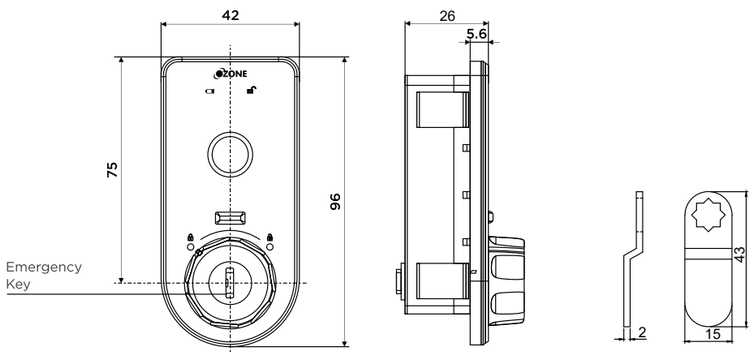

PASSWORD & FINGERPRINT LOCK



OZFL-203-PF ₹ 5,970

Password & Fingerprint Lock
For Wooden / Metal Cabinets & Wardrobes
Door Thickness: 1-25mm



Fingerprint

User Password

Master Password

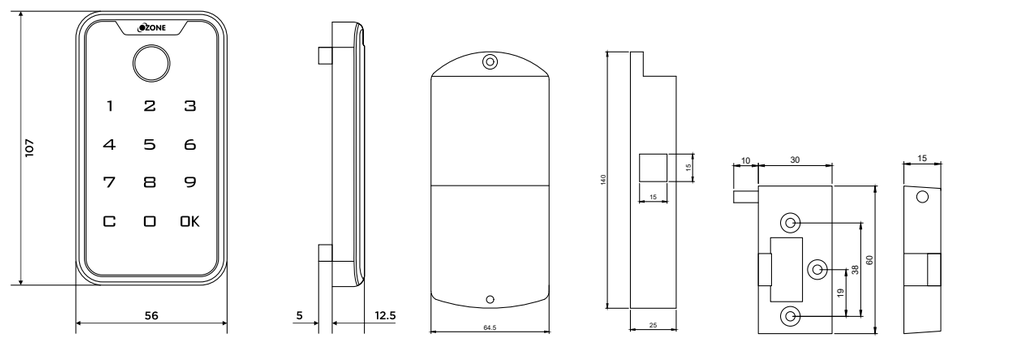

PASSWORD LOCK



OZFL-201-PW* ₹ 3,230

OZFL-201- LIFE PW ₹ 5,990

Password Lock
For Wooden / Metal Cabinets & Wardrobes
Door Thickness: 1-25mm

Master Password

Guest Password

User Password

OzoLife App

RFID Card



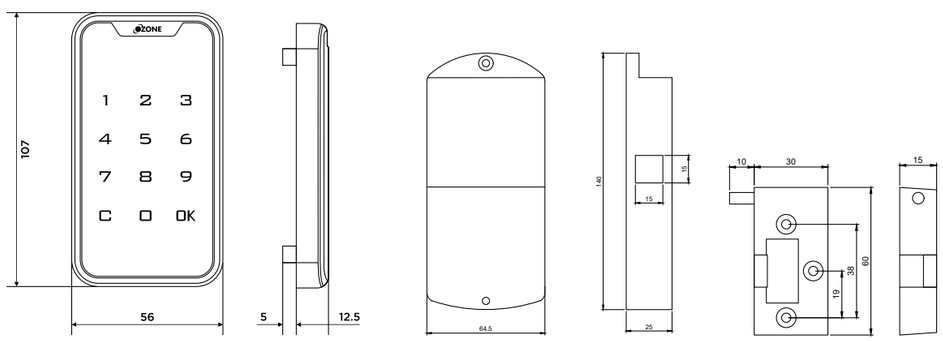

*Please Note: This product variant doesn't support OzoLife App.

RFID CARD LOCK



OZFL-202-RF ₹ 3,010

RFID Card Lock
For Wooden / Metal Cabinets & Wardrobes
Door Thickness: 1-25mm

RFID Card



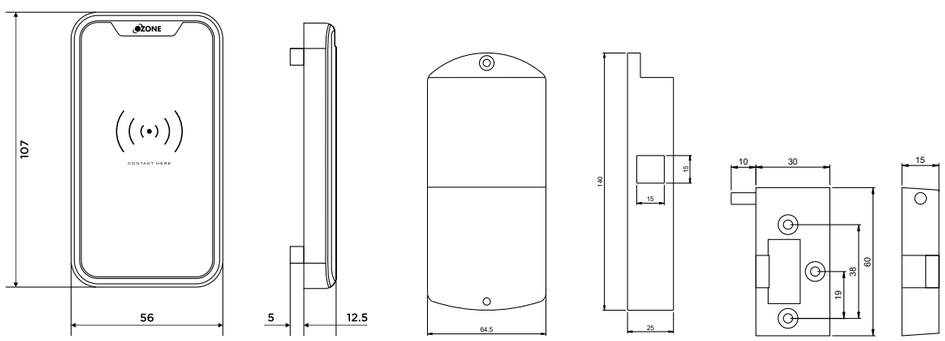

PASSWORD & KEY LOCK



OZFL-101-PK ₹ 4,310

Password & Key Lock
For Wooden / Metal Cabinets & Wardrobes
Door Thickness: 1-18mm

Master Password
Emergency Key
User Password



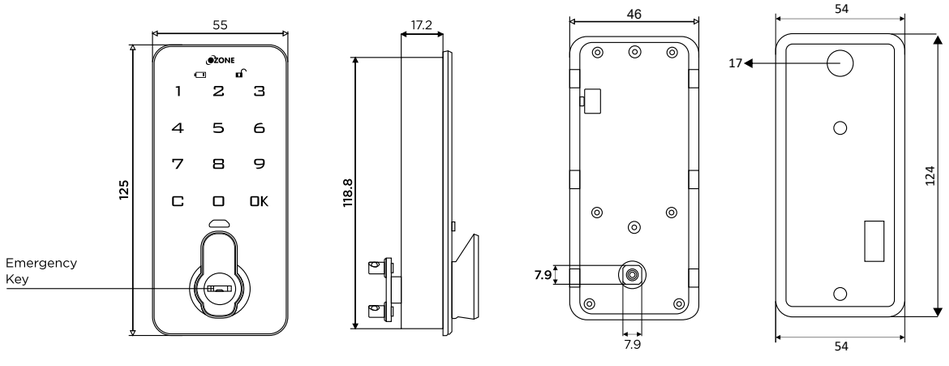

FINGERPRINT, PASSWORD, & KEY LOCK



OZFL-102-FPK ₹ 6,470

Fingerprint, Password, & Key Lock
For Wooden / Metal Cabinets & Wardrobes
Door Thickness: 1-18mm

Fingerprint
Emergency Key
Master Password
User Password



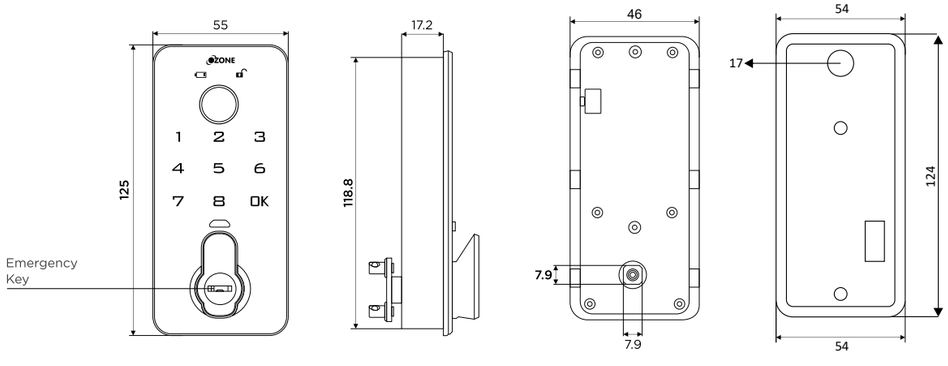

PASSWORD LOCK



OZFL-401-PW ₹ 3,230

Password Lock
for Single or Multiple Metal / Wooden Drawers
for Swing & Sliding Metal & Wooden
Cabinets & Wardrobes
Door Thickness: 1-25mm

Master Password

User Password

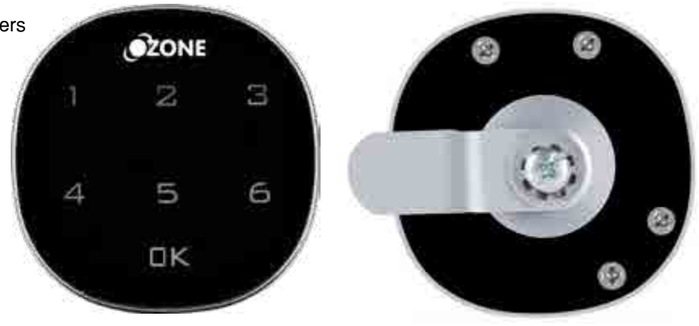

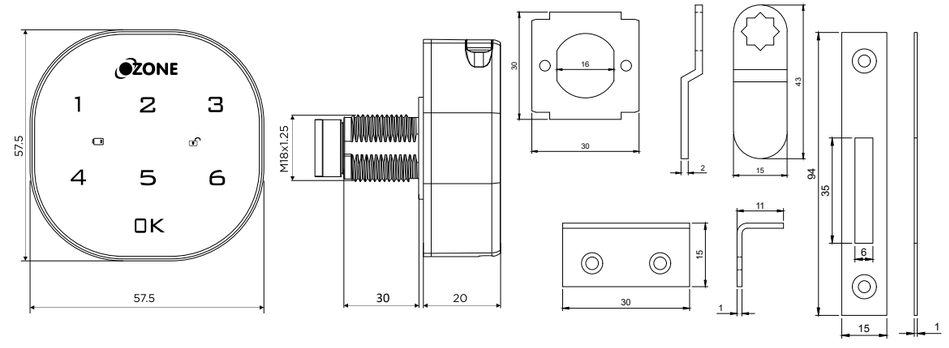

FINGERPRINT LOCK



OZFL-402-F ₹ 4,920

Fingerprint Lock
for Single or Multiple Metal / Wooden Drawers
for Swing & Sliding Metal & Wooden
Cabinets & Wardrobes
Door Thickness: 1-25mm

Fingerprint

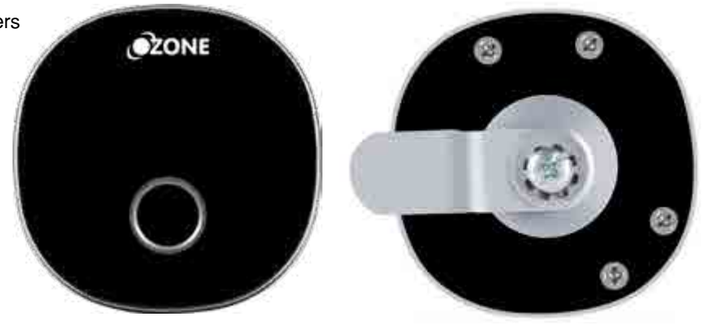

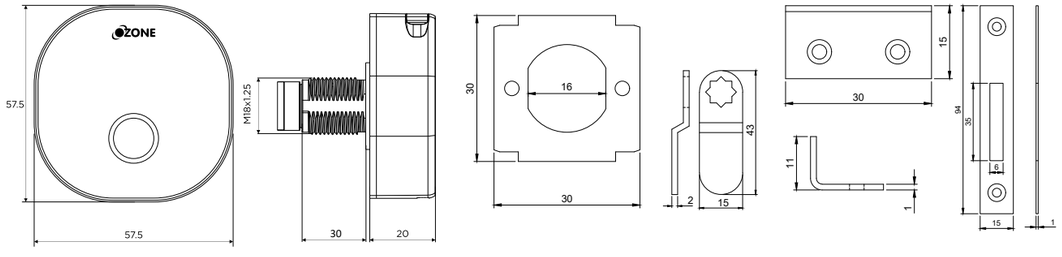

RFID LOCK



OZFL-403-RF ₹ 2,930

RFID Lock
for Single or Multiple Metal / Wooden Drawers
for Swing & Sliding Metal & Wooden, Cabinets & Wardrobes
Door Thickness: 1-25mm

RFID

RFID Card



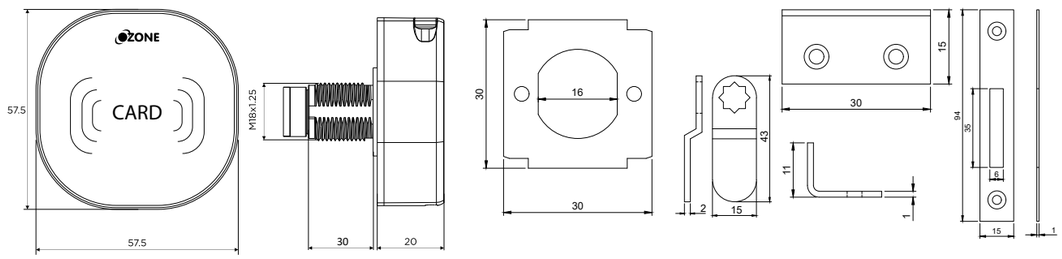

FINGERPRINT LOCK



OZFL-55F BLACK ₹ 5,490

Fingerprint Lock
for Wooden Cabinets, Wardrobes & Drawers
Door Thickness: 12-25mm

Fingerprint



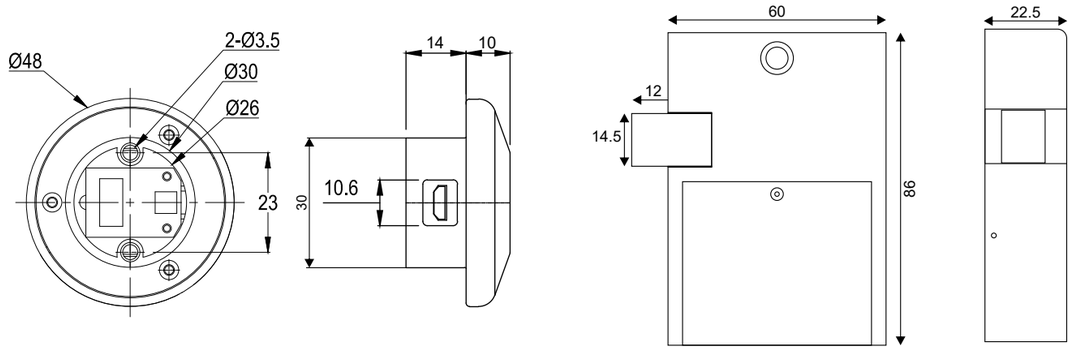

FINGERPRINT LOCK



OZFL-55 F AB ₹ 5,490

Fingerprint Lock
for Wooden Cabinets, Wardrobes, & Drawers
Door Thickness: 12-25mm

Fingerprint



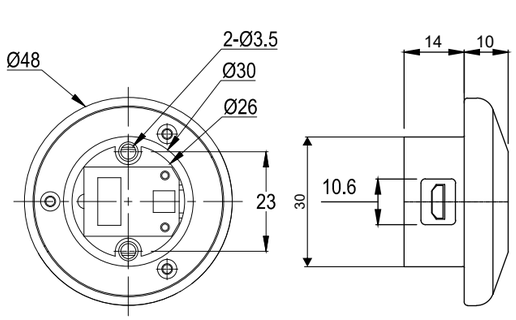

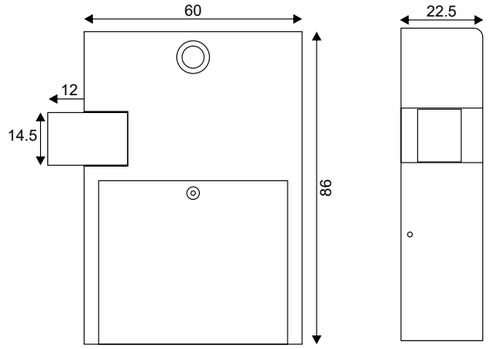

SECURITY
SOLUTIONS

FINGERPRINT LOCK



OZFL-55F SN ₹ 5,490

Fingerprint Lock
for Wooden Cabinets, Wardrobes, & Drawers
Door Thickness: 12-25mm

Fingerprint



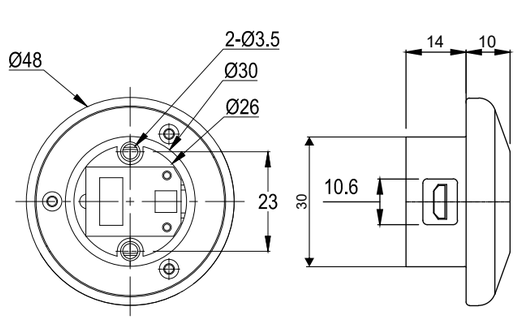

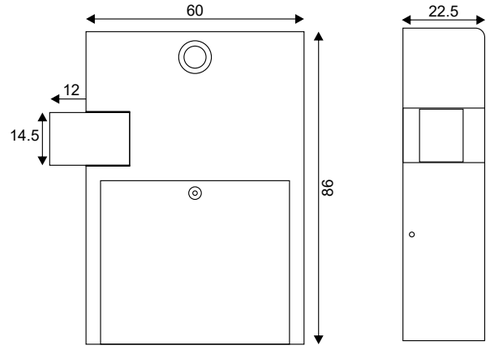

FURNITURE LOCKS

PASSWORD & FINGERPRINT LOCK



OZFL-501 PF ₹ 7,990

Password & Fingerprint Lock
for Metal Cabinet & Wardrobes
Door Thickness: 1-5mm

Master Password

Fingerprint

User Password



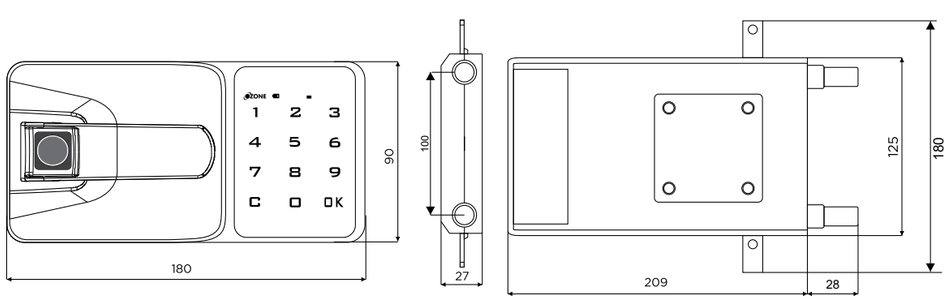

PASSWORD LOCK



OZFL-502-PW ₹ 4,990

Password Lock
for Metal Cabinet & Wardrobes
Door Thickness: 1-5mm

Master Password

User Password



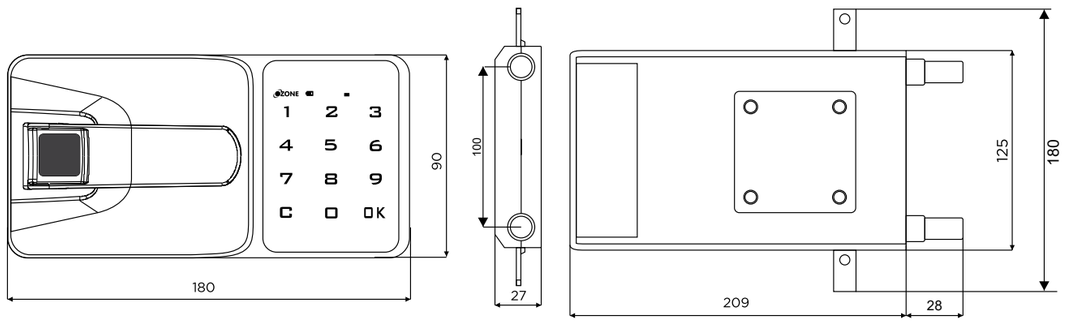

PASSWORD LOCK



OZFL-88 P BLACK ₹ 2,390

Password Lock
for Wooden Cabinets, Wardrobes, & Drawers
Door Thickness: 12-25mm

Master Password

User Password





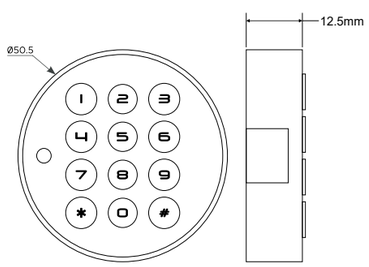

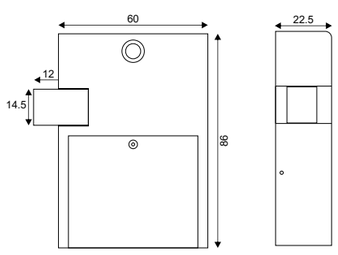

RFID LOCK



OZFL-RF-INV STD BLACK ₹ 2,650

Invisible Lock
Suitable for Swing & Slide Wooden Cabinets, Wardrobes, & Drawers
Door Thickness: 05-25mm
1 master and 14 users card

RFID Card



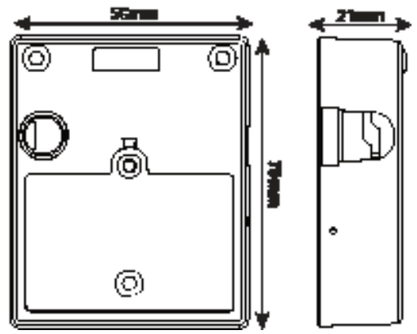

SECURITY



SMART DEVICES
The eye that will NEVER blink.

Real-time motion detection. Remote Access. Swift Notifications. Additionally, it allows two-way communication. Infrared night-vision enables user to remain alert during nighttime as well, so you live life on go.

SECUREASY

VIDEO DOOR PHONE INDOOR STATION



VM-AHD-7263-01 ₹ 23,500

Video Door Phone Indoor Station
for Multi Apartments



Smart Features

- 7” High Resolution Screen
- Feather Touch Button
- 2 Way Talk
- Custom Ringtones
- Snapshot Video
- Open 3 Locks
- 2 Doorbells + 2 Cameras
- Photo Frame
- SD Card 128 GB
- Remote Unlock
- Cascade upto 6 Monitors
- Wi-Fi Frequency 2.4Ghz Only
- Wi-Fi
- OzoLife App

VIDEO DOOR PHONE OUTDOOR STATION



VB-AHD-2M4C-01 ₹ 13,500

Outdoor Station for Multi Apartments
Finish: BLACK



Smart Features

- 1080P
- IP65 Weather Proof
- 2 Way Talk
- Day/Night Vision
- Motion Detection
- 2.8mm Lens
- Exit Button Function
- Connects upto 4 Floor
- RFID Card Unlock Function (Optional)

SECUREASY

VIDEO DOOR PHONE INDOOR STATION



VM-AHD-7263-02 ₹ 19,000

Video Door Phone Indoor Station
for Single Apartment



Smart Features

- 7” — High Resolution Screen
- Feather Touch Button
- 2 Way Talk
- Custom Ringtones
- Wi-Fi Frequency 2.4Ghz Only
- Snapshot Video
- Photo Frame
- Remote Unlock
- SD Card 128 GB

VIDEO DOOR PHONE OUTDOOR STATION



VB-AHD-2M4C-02 ₹ 7,500

Outdoor Station for Single Apartment

Smart Features

- 1080P
- IP65 — IP 65 Weather Proof
- 2 Way Talk
- Day/Night Vision
- Motion Detection
- 2.8mm Lens
- RFID Card Unlock Function (Optional)



VIDEO DOOR PHONE INDOOR STATION



OZ-VDP ECO-03 ₹ 14,990

Video Door Phone Indoor Station &
Outdoor Station for Single Apartment



Smart Features

- 7” — High Resolution Screen
- Feather Touch Button
- 2 Way Talk
- Custom Ringtones

VIDEO DOOR PHONE OUTDOOR STATION



Smart Features

- 600 TVL
- IP65 — IP 65 Weather Proof
- 2 Way Talk
- Day/Night Vision
- 2.8mm Lens



SMART DOOR BELL



Smart Features

- 100% — Wire-Free Installation
- 6700 mAh — Rechargeable Battery
- PIR Motion Sensor Instant & Accurate Alerts
- Two-way Communiaction
- SD Card 128 GB
- Wireless Chime
- Google Nest/ Alexa Echo Show
- IP 65 Weather Proof
- Android/iOS System Mobile Devices
- Do It Yourself Installation
- 2.4 MM Lens
- 16-24V AC Wired Connection (Optional)
- Wi-Fi Frequency 2.4Ghz Only



WORKS WITH ALEXA/GOOGLE ASSISTANT



Amazon Echo Show/ Google Nest

= “Alexa/Google, show the front door.”

SECUREASY

SMART DOOR BELL

OZ-LIFE-WDB-01 ₹ 11,000

OzoLife App

Works with Google Assistant

Works with Alexa

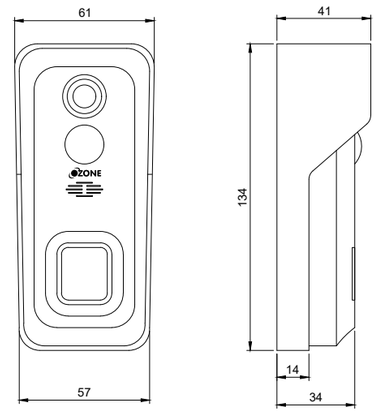

PTZ INDOOR SMART CAMERA



OZ-LIFE-PC-01 ₹ 5,300

PTZ Indoor Smart Camera

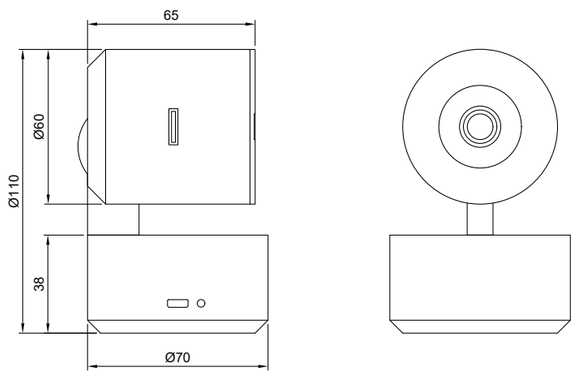



WORKS WITH ALEXA/GOOGLE ASSISTANT

+ = "Alexa/Google, show the front door."

Amazon Echo Show/
Google Nest

Smart Features

- 360° View
- Cloud Storage (Optional)
- Motion Detection & Tracking
- Two-way Communiaction
- Ceiling/Wall Mounting
- Android/iOS System Mobile Devices
- Do It Yourself Installation
- Wi-Fi Frequency 2.4Ghz Only
- SD Card 128 GB
- FHD 1080P Camera
- 3.9 MM Lens
- Infra-Red Night Vision
- Desktop Placement
- DC5V/1A
- Intelligent Scene Linkage

INDOOR SMART CAMERA



OZ-LIFE-FC-01 ₹ 4,500

Indoor Smart Camera

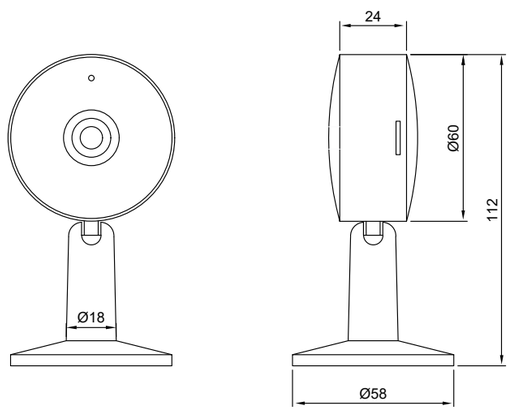



WORKS WITH ALEXA/GOOGLE ASSISTANT

+ = "Alexa/Google, show the front door."

Amazon Echo Show/
Google Nest

Smart Features

- Intelligent Scene Linkage
- Cloud Storage (Optional)
- Motion Detection
- Two-way Communiaction
- Ceiling/Wall Mounting
- Android/iOS System Mobile Devices
- Do It Yourself Installation
- SD Card 128 GB
- FHD 1080P Camera
- 3.6 MM Lens
- Infra-Red Night Vision
- Desktop Placement
- DC5V/1A
- Wi-Fi Frequency 2.4Ghz Only

SECUREASY

SMART PLUGS



OZ-SP-10A LIFE ₹ 1,890

Smart Plugs for Home Appliances

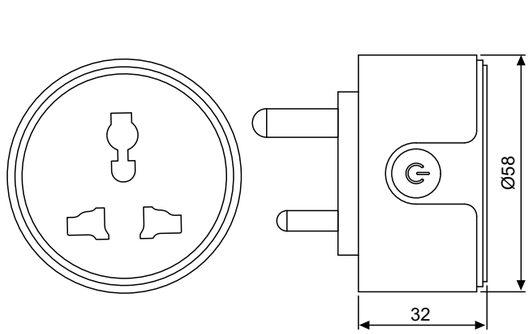



OzoLife App

Works with Google Assistant

Works with Alexa

Specification

Working Temp. -20°-50°C

Wi-Fi Frequency 2.4Ghz Only

Input Voltage AC 100V-240V

Smart Features

Energy Monitoring

Voice Control

Set Schedules & Timer

No Wiring Required

Global Remote Access

24x7 Real Time Monitoring

SMART PLUGS

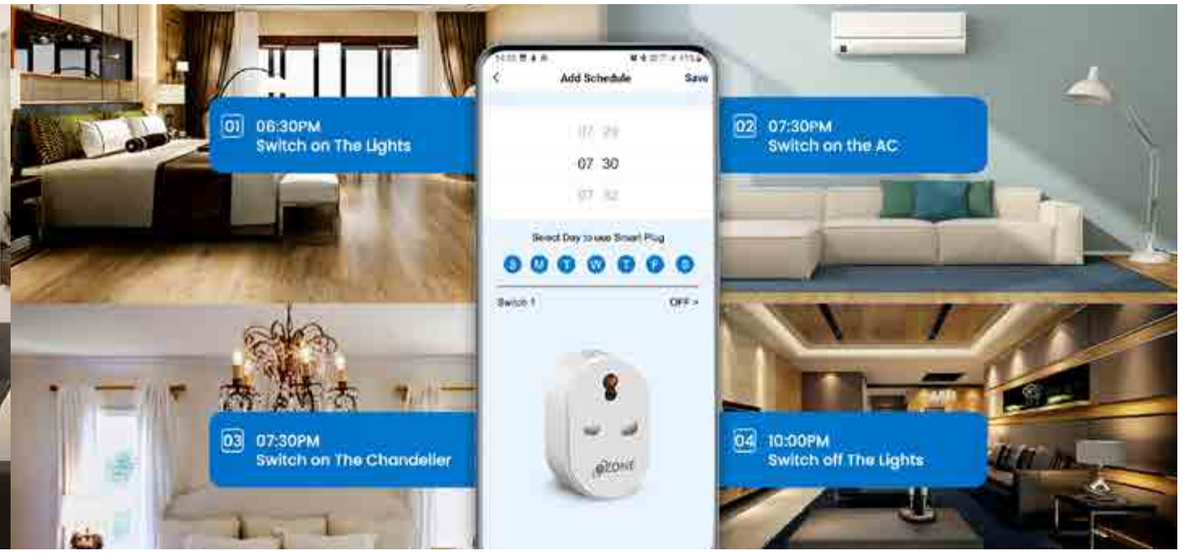

OZ-SP-16A LIFE ₹ 2,190

Smart Plugs for Home Appliances

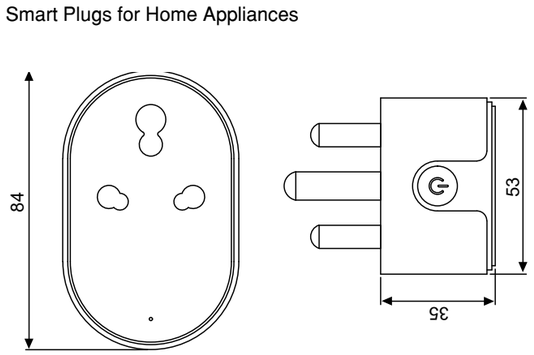



OzoLife App

Works with Google Assistant

Works with Alexa

Specification

Working Temp. -20°-50°C

Wi-Fi Frequency 2.4Ghz Only

Input Voltage AC 100V-240V

Smart Features

Energy Monitoring

Voice Control

Set Schedules & Timer

No Wiring Required

Global Remote Access

24x7 Real Time Monitoring

SECUREASY



DIGITAL SAFES

- Fire Warrior Safes
- Fire Warrior Notify Safes
- Home and Office Safes
- Hotel Safes
- Fingerprints Safe
- Tool Resistance Safes
- Drawer Safes
- Hazards Safe

A Secure Twist to Traditional Lock & Key

From Safes that fit in your closet to Safes that stand tall against perpetrators. We have it all.

Our extensive collection of Digital Safes can be operated with combinations of User Password, Fingerprints, a user-friendly App, and a key for emergencies. The range ensures optimum safety & security of all valuables – be it at home, office, hotel, retail, and other commercial establishments at any given time.

FIREPROOF SERIES

Fire Warrior-11 ₹ 39,150





FIRE WARRIOR-11

Size (mm)	(H) 385 x (W) 496 x (D) 390
Size (inch)	(H) 15.16 x (W) 19.53 x (D) 15.35
Weight (Kg)	47 (Approx.)
Volume (Ltr.)	19
Accessories	1 Tray Inside

APPLICATION

Home Office Warehouse Jewellers

Fireproof Tested Anti-Theft Alarm Dual Combination Access

Key Features:

- Digital keypad with LCD Screen
- User Access: 4 to 8 Digit Password
- Dual Password Option: User & Master
- Works on a combination of Password & Key for added security
- Computerised Key
- Low-Battery Indicator
- External battery back-up option
- Auto-Freeze after 3 consecutive wrong password attempts followed by keypad inactivity and a 60 second beep sound
- Can access the last 14 opening records in the display screen

FIREPROOF SERIES

Fire Warrior-22 ₹ 41,790





FIRE WARRIOR-22

Size (mm)	(H) 385 x (W) 495 x (D) 390
Size (inch)	(H) 15.16 x (W) 19.49 x (D) 15.35
Weight (Kg)	46 (Approx.)
Volume (Ltr.)	19
Accessories	1 Tray Inside

APPLICATION

Home Office Warehouse Jewellers

Fireproof Tested Anti-Theft Alarm Dual Combination Access

Key Features:

- Digital keypad with LCD Screen
- User Access: 4 to 8 Digit Password
- Dual Password Option: User & Master
- Works on a combination of Password & Key for added security
- Computerised Key
- Low-Battery Indicator
- External battery back-up option
- Auto-Freeze after 3 consecutive wrong password attempts followed by keypad inactivity and a 60 second beep sound
- Can access the last 50 opening records in the display screen

FIREPROOF SERIES

Fire Warrior-55 ₹ 54,990





FIRE WARRIOR-55

Size (mm)	(H) 595 x (W) 460 x (D) 470
Size (inch)	(H) 23.43 x (W) 18.11 x (D) 18.50
Weight (Kg)	80 (Approx.)
Volume (Ltr.)	40
Accessories	1 Adjustable Shelf

APPLICATION

Home Office Warehouse Jewellers

Key Features:

- Digital keypad with LCD Screen
- User Access: 4 to 8 Digit Password
- Dual Password Option: User & Master
- Works on a combination of Password & Key for added security
- Computerised Key
- Low-Battery Indicator
- External battery back-up option
- Auto-Freeze after 3 consecutive wrong password attempts followed by keypad inactivity and a 60 second beep sound
- Can access the last 14 opening records in the display screen

Fireproof Tested Anti-Theft Alarm Dual Combination Access

FIREPROOF SERIES

Fire Warrior-77 ₹ 72,150





FIRE WARRIOR-77

Size (mm)	(H) 760 x (W) 500 x (D) 490
Size (inch)	(H) 29.92 x (W) 19.69 x (D) 19.29
Weight (Kg)	110 (Approx.)
Volume (Ltr.)	67
Accessories	1 Adjustable Shelf & 1 Drawer Inside

APPLICATION

Home Office Warehouse Jewellers

Key Features:

- Digital keypad with LCD Screen
- User Access: 4 to 8 Digit Password
- Dual Password Option: User & Master
- Works on a combination of Password & Key for added security
- Computerised Key
- Low-Battery Indicator
- External battery back-up option
- Auto-Freeze after 3 consecutive wrong password attempts followed by keypad inactivity and a 60 second beep sound
- Can access the last 14 opening records in the display screen

Fireproof Tested Anti-Theft Alarm Dual Combination Access

FIREPROOF SERIES

Fire Warrior-99 ₹ 98,990





FIRE WARRIOR-99

Size (mm)	(H) 985 x (W) 600 x (D) 570
Size (inch)	(H) 38.78 x (W) 23.62 x (D) 22.44
Weight (Kg)	185 (Approx.)
Volume (Ltr.)	145
Accessories	1 Adjustable Shelf & 1 Drawer Inside

APPLICATION

Home Office Warehouse Jewellers

Fireproof Tested Anti-Theft Alarm Dual Combination Access

Key Features:

- Digital keypad with LCD Screen
- User Access: 4 to 8 Digit Password
- Dual Password Option: User & Master
- Works on a combination of Password & Key for added security
- Computerised Key
- Low-Battery Indicator
- External battery back-up option
- Auto-Freeze after 3 consecutive wrong password attempts followed by keypad inactivity and a 60 second beep sound
- Can access the last 14 opening records in the display screen

FIREPROOF SERIES

Fire Warrior-1200 ₹ 1,07,790





FIRE WARRIOR-1200

Size (mm)	(H) 1200 x (W) 700 x (D) 635
Size (inch)	(H) 47 x (W) 27 x (D) 25
Weight (Kg)	270 (Approx.)
Volume (Ltr.)	230
Accessories	2 Adjustable Shelf & 1 Drawer Inside

APPLICATION

Home Office Warehouse Jewellers

Fireproof Anti-Theft Alarm Dual Combination Access

Key Features:

- Digital keypad with LED Screen
- User Access: 4 to 15 Digits Password
- Dual Password Option: User & Master
- Works on a combination of Password & Key for added security
- Computerised Key
- Low-Battery Indicator
- Auto-Freeze mode on 3 consecutive wrong Password attempts resulting into keypad inactivity for 5 minutes

FIREPROOF SERIES

Fire Warrior-1700 ₹ 1,75,990





FIRE WARRIOR-1700

Size (mm)	(H) 1700 x (W) 800 x (D) 630
Size (inch)	(H) 66.93 x (W) 31.50 x (D) 24.80
Weight (Kg)	525 (Approx.)
Volume (Ltr.)	417
Accessories	3 Adjustable Shelf & 1 Drawer Inside

APPLICATION

Home Office Warehouse Jewellers

Key Features:

- Digital keypad with LED Screen
- User Access: 4 to 15 Digits Password
- Dual Password Option: User & Master
- Works on a combination of Password & Key for added security
- Computerised Key
- Low-Battery Indicator
- Auto-Freeze mode on 3 consecutive wrong Password attempts resulting into keypad inactivity for 5 minutes

Fireproof Anti-Theft Alarm Dual Combination Access

FIREPROOF SERIES

OES-FGP-FP-11 ₹ 42,340





OES-FGP-FP-11

Size (mm)	(H) 370 x (W) 485 x (D) 430
Size (inch)	(H) 14.57 x (W) 19.09 x (D) 16.93
Weight (Kg)	52 (Approx.)
Volume (Ltr.)	19.5
Accessories	1 Tray Inside

APPLICATION

Home Office Warehouse Jewellers

Key Features:

- Digital keypad with LED light
- User access with 4 to 8 Digits password
- Works on a combination of Password & Key
- Auto-Freeze mode on 3 consecutive wrong Password attempts resulting into keypad inactivity for 60 seconds
- Register up to 10 fingerprints
- Emergency Key available
- Low-Battery Indicator
- The last 14 opening records can be traced in the display screen

Fireproof Dual Combination Access Password & Fingerprint

NOTIFY SAFES

Fire Warrior-77 N Series ₹ 94,150





FIRE WARRIOR-77 N SERIES

Size (mm)	(H) 760 x (W) 500 x (D) 490
Size (inch)	(H) 29.92 x (W) 19.69 x (D) 19.29
Weight (Kg)	110 (Approx.)
Volume (Ltr.)	67
Accessories	1 Adjustable Shelf & 1 Drawer Inside

APPLICATION

Home Office Warehouse Jewellers

Key Features:

- Notify module inside the safe for added safety
- SMS Alert to 7 predefined mobile numbers
- Special fireproof material (cellulose concrete) ensures the inner temperature remains less than 118 C, while exposed in 103°C flame for up to one hour
- User Access: Combination of User Password & Manual key
- Emergency override key
- Strong Steel Shooting Bolts
- Unique Notify GSM module
- Vibration sensor to detect break-in/tempering
- Wireless Hooter that can be kept away from the Safe

Fireproof Tested Anti-Theft Alarm Dual Combination Access

Wireless Hooter SMS Alert

NOTIFY SAFES

Fire Warrior-99 N Series ₹ 1,31,990





FIRE WARRIOR-99 N SERIES

Size (mm)	(H) 920 x (W) 600 x (D) 570
Size (inch)	(H) 36.22 x (W) 23.62 x (D) 22.44
Weight (Kg)	220 (Approx.)
Volume (Ltr.)	145
Accessories	1 Adjusable Shelf & 1 Drawer Inside

APPLICATION

Home Office Warehouse Jewellers

Key Features:

- Notify module inside the safe for added safety
- SMS Alert to 7 predefined mobile numbers
- Special fireproof material (cellulose concrete) ensures the inner temperature remains less than 118 C, while exposed in 1030 C flame for up to one hour
- User Access: Combination of User Password & Manual key
- Emergency override key
- Strong Steel Shooting Bolts
- Unique Notify GSM module
- Vibration sensor to detect break-in/tempering
- Wireless Hooter that can be kept away from the Safe

Fireproof Tested Anti-Theft Alarm Dual Combination Access

Wireless Hooter SMS Alert

SAFILO SERIES

Safilo Bio-X ₹ 18,470





Password | Auto Freeze | LED Display | Emergency Key | Combination with Password & Fingerprint

SAFILO BIO-X

Size (mm)	(H) 350 x (W) 400 x (D) 350
Size (inch)	(H) 13.78 x (W) 15.74 x (D) 13.78
Weight (Kg)	21.3 (Approx.)
Volume (Ltr.)	40.8
Accessories	1 Shelf Inside

APPLICATION

Home | Office | Warehouse | Logistic

Key Features:

- Digital Touch Screen panel with LED display
- User Access Modes–
  a) Combination of Fingerprint & Password
  b) 3 to 8 digits Password
  c) Fingerprint
- Emergency Key available
- Auto-Freeze after 3 consecutive wrong password attempts followed by keypad inactivity and a 20 second beep sound
- Register up to 29 fingerprints
- External Battery Back-up option available
- Internal LED Light for clear visibility inside the Safe
- Low-Battery indicator

SAFILO SERIES

Safilo Bio-1 ₹ 19,790





Password | Auto Freeze | LED Display | Emergency Key | Combination with Password & Fingerprint | Touch Screen Panel

SAFILO BIO-1

Size (mm)	(H) 420 x (W) 350 x (D) 360
Size (inch)	(H) 16.54 x (W) 13.78 x (D) 14.17
Weight (Kg)	20.4 (Approx.)
Volume (Ltr.)	40
Accessories	1 Shelf Inside

APPLICATION

Home | Office | Warehouse | Logistic

Key Features:

- Digital Touch Screen panel with LED display
- User Access Modes–
  a) Combination of Fingerprint & Password
  b) 3 to 8 digits Password
  c) Fingerprint
- Emergency Key available
- Auto-Freeze after 3 consecutive wrong password attempts followed by keypad inactivity and a 20 second beep sound
- Register up to 29 fingerprints
- External Battery Back-up option available
- Internal LED Light for clear visibility inside the Safe
- Low-Battery indicator

SAFILO SERIES

Safilo Bio-2 ₹ 20,890





SAFILO BIO-2

Size (mm)	(H) 555 x (W) 350 x (D) 360
Size (inch)	(H) 21.85 x (W) 13.78 x (D) 14.17
Weight (Kg)	24.7 (Approx.)
Volume (Ltr.)	55
Accessories	1 Shelf Inside

APPLICATION

Home Office Retail Logistic

Password Auto Freeze LED Display Emergency Key

Combination with Password & Fingerprint Touch Screen Panel

Key Features:

- Digital Touch Screen panel with LED display
- User Access Modes–
  a) Combination of Fingerprint & Password
  b) 3 to 8 digits Password
  c) Fingerprint
- Emergency Key available
- Auto-Freeze after 3 consecutive wrong password attempts followed by keypad inactivity and a 20 second beep sound
- Register up to 29 fingerprints
- External Battery Back-up option available
- Internal LED Light for clear visibility inside the Safe
- Low-Battery indicator

SAFILO SERIES

Safilo Digital-11 ₹ 10,790





SAFILO DIGITAL-11

Size (mm)	(H) 250X (W) 350 X (D) 250
Size (inch)	(H) 9.84 X (W) 13.77 X (D) 9.84
Weight (Kg)	9.4 (Approx.)
Volume (Ltr.)	15.94

APPLICATION

Home Office Retail

Password Auto Freeze LED Display Emergency Key

Key Features:

- Digital keypad with LED screen
- User access with 3 to 6 Digits password
- Dual Password Option: User & Master
- Auto-Freeze mode on 3 consecutive wrong password attempts resulting into keypad inactivity for 5 minutes
- Emergency Key available
- Heavy duty motorised Shooting Bolts
- Low-Battery Indicator
- External Battery Back-up option available
- Internal LED Light for clear visibility inside the Safe

SAFILO SERIES

Safilo Digital-1 ₹ 15,390





SAFILO DIGITAL-1

Size (mm)	(H) 420 x (W) 350 x (D) 360
Size (inch)	(H) 16.54 x (W) 13.78 x (D) 14.17
Weight (Kg)	20 (Approx.)
Volume (Ltr.)	40
Accessories	1 Shelf Inside

APPLICATION

Home Office Retail

Key Features:

- Digital keypad with LED screen
- User access with 3 to 6 Digits password
- Dual Password Option: User & Master
- Auto-Freeze mode on 3 consecutive wrong password attempts resulting into keypad inactivity for 5 minutes
- Emergency Key available
- Heavy duty motorised Shooting Bolts
- Low-Battery Indicator
- External Battery Back-up option available
- Internal LED Light for clear visibility inside the Safe

Password Auto Freeze LED Display Emergency Key

SAFILO SERIES

Safilo Digital-2 ₹ 17,590





SAFILO DIGITAL-2

Size (mm)	(H) 555 x (W) 350 x (D) 360
Size (inch)	(H) 21.80 x (W) 13.78 x (D) 14.17
Weight (Kg)	23.8 (Approx.)
Volume (Ltr.)	55
Accessories	1 Shelf Inside

APPLICATION

Home Office Retail

Key Features:

- Digital keypad with LED screen
- User access with 3 to 6 Digits password
- Dual Password Option: User & Master
- Auto-Freeze mode on 3 consecutive wrong password attempts resulting into keypad inactivity for 5 minutes
- Emergency Key available
- Heavy duty motorised Shooting Bolts
- Low-Battery Indicator
- External Battery Back-up option available
- Internal LED Light for clear visibility inside the Safe

Password Auto Freeze LED Display Emergency Key

SAFILO SERIES

Safilo Bio-Z ₹ 13,465



SAFILO BIO-Z

Size (mm)	(H) 250 x (W) 350 x (D) 250
Size (inch)	(H) 9.84 x (W) 13.77 x (D) 9.84
Weight (Kg)	9.5 (Approx.)
Volume (Ltr.)	16



APPLICATION

Home Office Retail

Password Auto Freeze LED Display Emergency Key

Combination with Password & Fingerprint

Key Features:

- Digital keypad with LED screen
- User Access Modes–
  a) Combination of Fingerprint & Password
  b) 4 to 8 digits Password
  c) Fingerprint
- Auto-Freeze mode on 3 consecutive wrong password attempts resulting into keypad inactivity for 5 minutes
- Emergency Key available
- Register up to 30 fingerprints
- External battery power input option available
- Surface Finish: Scratch-resistant powder coating

SECURITY
SOLUTIONS

SAFILO SERIES

Safilo BIO-Z Pro ₹ 15,265



SAFILO BIO-Z PRO

Size (mm)	(H) 250 x (W) 455 x (D) 375
Size (inch)	(H) 9.84 x (W) 17.91 x (D) 14.76
Weight (Kg)	12.4 (Approx.)
Volume (Ltr.)	34.94



APPLICATION

Home Office Retail

Password Auto Freeze LED Display Emergency Key

Combination with Password & Fingerprint

Key Features:

- Digital keypad with LED screen
- User Access Modes–
  a) Combination of Fingerprint & Password
  b) 4 to 8 digits Password
  c) Fingerprint
- Auto-Freeze mode on 3 consecutive wrong password attempts resulting into keypad inactivity for 5 minutes
- Emergency Key available
- Register up to 30 fingerprints
- External battery power input option available
- Surface Finish: Scratch-resistant powder coating

SAFILO SERIES

Safilo BIO-Max ₹ 17,225





SAFILO BIO-MAX

Size (mm)	(H) 420 x (W) 350 x (D) 360
Size (inch)	(H)16.53X(W)13.77X(D)14.17
Weight (Kg)	18.1 (Approx.)
Volume (Ltr.)	44.1

APPLICATION

Home Office Retail

Password Auto Freeze LED Display Emergency Key

Combination with Password & Fingerprint

Key Features:

- Digital keypad with LED screen
- User Access Modes–
  a) Combination of Fingerprint & Password
  b) 4 to 8 digits Password
  c) Fingerprint
- Auto-Freeze mode on 3 consecutive wrong password attempts resulting into keypad inactivity for 5 minutes
- Emergency Key available
- Register up to 30 fingerprints
- External battery power input option available
- Surface Finish: Scratch-resistant powder coating

BAS-i10

Bas-i10 ₹ 6,260





OES-BAS-i10

Size (mm)	(H) 200 x (W) 300 x (D) 200
Size (inch)	(H) 7.8 x (W) 11.08 x (D) 7.8
Weight (Kg)	5.15 (Approx.)
Volume (Ltr.)	7.9

APPLICATION

Home Office Retail

Password Auto Freeze Emergency Key

Key Features:

- Digital keypad with LED light option
- User access with 3 to 8 Digits password
- Auto-Freeze mode on 3 consecutive wrong password attempts resulting into keypad inactivity for 3 minutes
- Emergency Key available
- Low-Battery Indicator
- Surface Finish: Scratch-resistant powder coating

AGATE BLACK

Agate Black ₹ 7,250





AGATE BLACK

Size (mm)	(H) 200 x (W) 350 x (D) 200
Size (inch)	(H) 7.87 x (W) 13.78 x (D) 7.87
Weight (Kg)	5.9 (Approx.)
Volume (Ltr.)	9.2

APPLICATION

Home Office Retail

Key Features:

- Digital keypad with LED light
- User access with 3 to 8 Digits password
- Auto-Freeze mode on 3 consecutive wrong password attempts resulting into keypad inactivity for 3 minutes
- Emergency Key available
- Low-Battery Indicator
- Surface Finish: Scratch-resistant powder coating

Password Auto Freeze Emergency Key

SAFES

TUSKER SERIES

Tusker-10 Grey ₹ 7,690





TUSKER-10 GREY

Size (mm)	(H) 200 x (W) 350 x (D) 200
Size (inch)	(H) 7.87 x (W) 13.78 x (D) 7.87
Weight (Kg)	5.9 (Approx.)
Volume (Ltr.)	9.2

APPLICATION

Home Office Retail

Key Features:

- Digital keypad with LCD Display
- User access with 3 to 8 Digits password
- Dual Password Option: User & Master
- Emergency Key available
- Low-Battery Indicator
- External Battery Back-up option
- Auto-Freeze mode on 3 consecutive wrong Password attempts resulting into keypad inactivity for 60 seconds

Password Auto Freeze LCD Display Emergency Key

SAFES

TUSKER SERIES

Tusker-11 Grey ₹ 8,790





TUSKER-11 GREY

Size (mm)	(H) 250 x (W) 350 x (D) 250
Size (inch)	(H) 9.84 x (W) 13.78 x (D) 9.84
Weight (Kg)	9.50 (Approx.)
Volume (Ltr.)	16
Accessories	1 Shelf Inside

APPLICATION

Home Office Retail

Key Features:

- Digital keypad with LCD Display
- User access with 3 to 8 Digits password
- Dual Password Option: User & Master
- Emergency Key available
- Low-Battery Indicator
- External Battery Back-up option
- Auto-Freeze mode on 3 consecutive wrong password attempts resulting into keypad inactivity for 60 seconds

Password Auto Freeze LCD Display Emergency Key

SAFES

TUSKER SERIES

Tusker-22 Grey ₹ 10,990





TUSKER-22 GREY

Size (mm)	(H) 200 x (W) 430 x (D) 380
Size (inch)	(H) 7.87 x (W) 16.92 x (D) 14.96
Weight (Kg)	11 (Approx.)
Volume (Ltr.)	26.3

APPLICATION

Home Office Retail

Key Features:

- Digital keypad with LCD Display
- User access with 3 to 8 Digits password
- Dual Password Option: User & Master
- Emergency Key available
- Low-Battery Indicator
- External Battery Back-up option
- Auto-Freeze mode on 3 consecutive wrong password attempts resulting into keypad inactivity for 60 seconds

Password Auto Freeze LCD Display Emergency Key

SAFES

TUSKER SERIES

Tusker-44 Grey ₹ 15,390





TUSKER-44 GREY

Size (mm)	(H) 350 x (W) 450 x (D) 355
Size (inch)	(H) 13.77 x (W) 17.71 x (D) 13.97
Weight (Kg)	21 (Approx.)
Volume (Ltr.)	44

APPLICATION

Home Office Retail

Password Auto Freeze LCD Display Emergency Key

Key Features:

- Digital keypad with LCD Display
- User access with 3 to 8 Digits password
- Dual Password Option: User & Master
- Emergency Key available
- Low-Battery Indicator
- External Battery Back-up option
- Auto-Freeze mode on 3 consecutive wrong password attempts resulting into keypad inactivity for 60 seconds

TUSKER SERIES

Tusker-NXT ₹ 11,990





TUSKER-NXT

Size (mm)	(H) 250 x (W) 455 x (D) 375
Size (inch)	(H) 9.84 x (W) 17.91 x (D) 14.76
Weight (Kg)	12.4 (Approx.)
Volume (Ltr.)	34.94

APPLICATION

Home Office Retail

Password Auto Freeze LCD Display Emergency Key

Key Features:

- Digital keypad with LCD Display
- User access with 3 to 8 Digits password
- Dual Password Option: User & Master
- Emergency Key available
- Low-Battery Indicator
- External Battery Back-up option
- Auto-Freeze mode on 3 consecutive wrong password attempts resulting into keypad inactivity for 60 seconds

ECO SERIES

ECO-BB-77-GREY ₹ 23,970





Password | Auto Freeze | LCD Display | Emergency Key

ES-ECO-BB-77 GREY

Size (mm)	(H) 650 x (W) 440 x (D) 405
Size (inch)	(H) 25.59 x (W) 17.32 x (D) 15.94
Weight (Kg)	34.7 (Approx.)
Volume (Ltr.)	95.40

APPLICATION

Home | Office | Retail

Key Features:

- Digital keypad with LCD Display
- User access with 3 to 8 Digits password
- Dual Password Option: User & Master
- Emergency Key available
- Low-Battery Indicator
- External Battery Back-up option
- Auto-Freeze mode on 3 consecutive wrong password attempts resulting into keypad inactivity for 60 seconds

FORT SERIES

Fort Safe AB-66 ₹ 34,990





Manual Key | Dual Key Combination

FORT SAFE AB-66

Size (mm)	(H) 555 x (W) 460 x (D) 360
Size (inch)	(H) 21.85 x (W) 18.11 x (D) 14.17
Weight (Kg)	64.3 (Approx.)
Volume (Ltr.)	78

APPLICATION

Home | Office | Logistic

Key Features:

- Dual Key Combination Mechanical lock.
- Innovative 3 side molded body design with 8 mm door thickness.
- 5 mm Steel plate on the door for additional security features.
- 25mm Two Heavy Duty Multi Channel SS shooting Bolt.
- Aesthetic Stainless Steel vault handle.
- Superior 6 lever locking mechanism technology.
- Double compartment as per customized use.
- Finish : Black matt with anti-corrosion surface treatment

FORT SERIES

Fort Safe AB DIGI-66 Black ₹ 37,990





FORT SAFE AB DIGI-66 BLACK

Size (mm)	(H) 555 X (W) 460 X (D) 360
Size (inch)	(H) 21.85 X (W) 18.11 X (D) 14.17
Weight (Kg)	64.4 (Approx.)
Volume (Ltr.)	78

APPLICATION

Home Office Logistic

Password Auto Freeze Emergency Spoke Handle

Key Features:

- Digital keypad with LED light option
- Dual Password (User + Master)
- User access: 4 to 8 digits password
- Low Battery indication
- Emergency key to open the safe in case you forget the user & master password
- Keypad auto freezes while entering wrong password three times
- Five spoke handle available to open and close the door
- Special fature:- Anti-burglary and tool resistance

SAFES

FORT SERIES

Fort Safe AB BIO-66 Black ₹ 39,990





FORT SAFE AB BIO-66 BLACK

Size (mm)	(H) 555 X (W) 460 X (D) 360
Size (inch)	(H)21.85 X (W) 18.11 X (D) 14.17
Weight (Kg)	64.3 (Approx.)
Volume (Ltr.)	78

APPLICATION

Home Office Logistic

Combination with Password & Fingerprint Auto Freeze Emergency Spoke Handle

Key Features:

- Dual Key Combination Mechanical lock.
- Innovative 3 side molded body design with 8 mm door thickness.
- 5 mm Steel plate on the door for additional security features.
- 25mm Two Heavy Duty Multi Channel SS shooting Bolt.
- Aesthetic Stainless Steel vault handle.
- Superior 6 lever locking mechanism technology.
- Double compartment as per customized use.
- Finish : Black matt with anti-corrosion surface treatment

SAFES

O-SQUIRE

O-Squire ₹ 8,350





O-SQUIRE

Size (mm)	(H) 200 x (W) 350 x (D) 200
Size (inch)	(H) 7.87 x (W) 13.78 x (D) 7.87
Weight (Kg)	5.9 (Approx.)
Volume (Ltr.)	9

APPLICATION

Home Office Retail Hotel

Key Features:

- Digital keypad with LED Screen
- User access with 3 to 6 Digits password
- Auto-Freeze mode on 4 consecutive wrong password attempts resulting into keypad inactivity for 15 minutes
- Emergency Key available
- Low-Battery Indicator
- Common Key option available on request
- External Battery Back-up option
- Audit Trail option available to check the past 100 opening record at an additional cost

Password Auto Freeze LED Display Emergency Key

O-LAPTOP

O-Laptop ₹ 10,990





O-LAPTOP

Size (mm)	(H) 200 x (W) 430 x (D) 380
Size (inch)	(H) 7.87 x (W) 16.93 x (D) 14.96
Weight (Kg)	11 (Approx.)
Volume (Ltr.)	26.70

APPLICATION

Home Office Hotel

Key Features:

- Digital keypad with LED Screen
- User access with 3 to 6 Digits password
- Auto-Freeze mode on 4 consecutive wrong password attempts resulting into keypad inactivity for 15 minutes
- Emergency Key available
- Low-Battery Indicator
- Common Key option available on request
- External Battery Back-up option
- Audit Trail option available to check the past 100 opening record at an additional cost

Password Auto Freeze LED Display Emergency Key

ARIES

Aries ₹ 10,550





Password | Auto Freeze | LED Display | Emergency Key

ARIES

Size (mm)	(H) 250 x (W) 350 x (D) 250
Size (inch)	(H) 9.84 x (W) 13.78 x (D) 9.84
Weight (Kg)	9.20 (Approx.)
Volume (Ltr.)	15.9
Accessories	1 Shelf Inside

APPLICATION

Home | Office | Retail | Hotel

Key Features:

- Digital keypad with LED Screen
- User access with 3 to 6 Digits password
- Auto-Freeze mode on 4 consecutive wrong password attempts resulting into keypad inactivity for 15 minutes
- Emergency Key available
- Low-Battery Indicator
- Common Key option available on request
- External Battery Back-up option
- Audit Trail option available to check the past 100 opening record at an additional cost

AGATE LAPTOP

Agate Laptop ₹ 8,350





AGATE LAPTOP



AGATE LAPTOP GREY

Password | Auto Freeze | Emergency Key

AGATE LAPTOP (Available in Grey Color Also)

Size (mm)	(H) 200 x (W) 430 x (D) 380
Size (inch)	(H) 7.87 x (W) 16.93 x (D) 14.96
Weight (Kg)	10.7 (Approx.)
Volume (Ltr.)	26.4

APPLICATION

Home | Office | Retail | Hotel

Key Features:

- Digital keypad with LED light
- User access with 3 to 8 Digits password
- Auto-Freeze mode on 3 consecutive wrong password attempts resulting into keypad inactivity for 3 minutes
- Emergency Key available
- Low-Battery Indicator
- Common Key option available on request
- External Battery Back-up option

JADE BLACK SERIES

Jade Black ₹ 14,290





JADE BLACK

Size (mm)	(H) 200 x (W) 435 x (D) 365
Size (inch)	(H) 7.87 x (W) 17.13 x (D) 14.37
Weight (Kg)	12.6 (Approx.)
Volume (Ltr.)	26

APPLICATION

Home Office Hotel Retail

Password Auto Freeze LED Display RFID Card

Key Features:

- Digital keypad with LED Screen
- User access with 3 to 6 Digits password
- Auto-Freeze mode on 4 consecutive wrong password attempts resulting into keypad inactivity for 5 minutes
- Dual Password Option: User & Master
- Emergency Key available
- Low-Battery Indicator
- Common Key option available on request
- Heavy duty motorised Shooting Bolts
- Audit Trail option available to check the past 100 opening record at an additional cost
- Available with RFID card access

SAFES

JADE BLACK SERIES

Jade Black 01 ₹ 9,890





JADE BLACK 01

Size (mm)	(H) 200 x (W) 350 x (D) 200
Size (inch)	(H) 7.87 x (W) 13.78 x (D) 7.87
Weight (Kg)	6.40 (Approx.)
Volume (Ltr.)	9.80

APPLICATION

Home Office Hotel Retail

Password Auto Freeze LED Display RFID Card

Key Features:

- Digital keypad with LED Screen
- User access with 3 to 6 Digits password
- Auto-Freeze mode on 4 consecutive wrong password attempts resulting into keypad inactivity for 5 minutes
- Dual Password Option: User & Master
- Emergency Key available
- Low-Battery Indicator
- Common Key option available on request
- Heavy duty motorised Shooting Bolts
- Audit Trail option available to check the past 100 opening record at an additional cost
- Available with RFID card access

SAFES

CONVENIO MANUAL SERIES

Convenio Manual-10 ₹ 5,330





CONVENIO MANUAL-10

Size (mm)	(H) 200 X (W) 350 X (D) 200
Size (inch)	(H) 7.87 X (W) 13.77 X (D) 7.87
Weight (Kg)	5.9 (Approx.)
Volume (Ltr.)	10

APPLICATION

Home Office Retail

Key Features:

- Manual 6 Lever Locking system
- Heavy duty shooting bolts
- Comes with two Solid Stainless Steel keys

Manual Key

CONVENIO MANUAL SERIES

Convenio Manual-11 ₹ 7,470





CONVENIO MANUAL-11

Size (mm)	(H) 250 x (W) 350 x (D) 250
Size (inch)	(H) 9.84 x (W) 13.78 x (D) 9.84
Weight (Kg)	9 (Approx.)
Volume (Ltr.)	15.5

APPLICATION

Home Office Retail

Key Features:

- Manual 6 Lever Locking system
- Heavy duty shooting bolts
- Comes with two Solid Stainless Steel keys

Manual Key

CONVENIO MANUAL SERIES

Convenio Manual-11S ₹ 11,999





CONVENIO MANUAL-11S

Size (mm)	(H) 254 X (W) 350 X (D) 250
Size (inch)	(H) 10 X (W) 13.77 X (D) 9.84
Weight (Kg)	12.5 (Approx.)
Volume (Ltr.)	22

APPLICATION

Home Office Retail

Key Features:

- Manual 6 Lever Locking system
- Heavy duty shooting bolts
- Comes with two Solid Stainless Steel keys

Manual Key

CONVENIO MANUAL SERIES

Convenio Manual-12 ₹ 21,990





CONVENIO MANUAL-12

Size (mm)	(H) 555 x (W) 350 x (D) 360
Size (inch)	(H) 21.85 x (W) 13.78 x (D) 14.17
Weight (Kg)	24.70 (Approx.)
Volume (Ltr.)	55

APPLICATION

Home Office Warehouse Logistic

Key Features:

- Manual 6 Lever Locking system
- Dual combination key system
- Heavy duty shooting bolts
- Comes with two Solid Stainless Steel keys

Manual Key

Dual Key Combination

CONVENIO MANUAL SERIES

Convenio Manual-DD 13 ₹ 21,990





CONVENIO MANUAL- DD 13

Size (mm)	(H) 700 x (W) 460 x (D) 460
Size (inch)	(H) 27.56 x (W) 18.11 x (D) 18.11
Weight (Kg)	45 (Approx.)
Volume (Ltr.)	92

APPLICATION

Home Office Retail

Key Features:

- Manual 6 Lever Locking system
- Heavy duty shooting bolts
- Comes with six Solid Stainless Steel keys
- Cash Drawer with separate key lock
- Money Deposit Drawer with separate key lock
- Strong construction: Heavy-Duty steel body with improved reliability for added protection

Manual Key Depository Drawers

MONEY BANK

Money Bank ₹ 1,390





MONEY BANK

Size (mm)	(H) 115 X (W) 150 X (D) 120
Size (inch)	(H) 4.5 X (W) 5.9 X (D) 4.7
Weight (Kg)	0.8 (Approx.)
Volume (Ltr.)	1.8

APPLICATION

Home Office Retail

Key Features:

- Manual 6 Lever Locking system
- Highly durable machnical steel keys
- Easy and compact size.
- Money Depository Slot Available on Top

Manual Key

SAFES

CONVENIO DIGITAL -33

Convenio Digital -33 ₹ 14,290



CONVENIO DIGITAL - 33

Size (mm)	(H) 127 x (W) 400 x (D) 350
Size (inch)	(H) 5.11 x (W) 15.75 x (D) 13.77
Weight (Kg)	11.2 (Approx.)
Volume (Ltr.)	10



APPLICATION

Home Office Hotel

Password Auto Freeze LED Display RFID Card

Key Features:

- Digital keypad with LED Screen
- User access with 3 to 6 Digits password
- Auto-Freeze mode on 4 consecutive wrong password attempts resulting into keypad inactivity for 5 minutes
- Dual Password Option: User & Master
- Emergency Key available
- Heavy duty motorised Shooting Bolts
- Low-Battery Indicator
- Common Key option available on request
- External Battery Back-up option
- Audit Trail option available to check the past 100 opening record at an additional cost
- Available with RFID card access

GUARDIAN MANUAL SERIES

Guardian Manual-11 ₹ 17,260





GUARDIAN MANUAL-11

Size (mm)	(H) 420 x (W) 350 x (D) 360
Size (inch)	(H) 16.53 x (W) 13.77 x (D) 14.17
Weight (Kg)	20 (Approx.)
Volume (Ltr.)	40

APPLICATION

Home Office Logistic

Manual Key Dual Key Combination

Key Features:

- Dual combination key system
- Innovative 3 side moulded body design with 5 mm door thickness
- Two Heavy-Duty SS Shooting Stainless Bolts
- Aesthetic Stainless Steel vault handle
- 5 Spoke handle available
- Superior 6 lever locking mechanism
- Double compartment customization available

GUARDIAN MANUAL SERIES

Guardian Manual-12 ₹ 26,390





GUARDIAN MANUAL- 12

Size (mm)	(H) 424 x (W) 460 x (D) 407
Size (inch)	(H) 16.69 x (W) 18.11 x (D) 16
Weight (Kg)	34 (Approx.)
Volume (Ltr.)	69

APPLICATION

Home Office Logistic

Key Features:

- Dual combination key system
- Innovative 3 side moulded body design with 5 mm door thickness
- Two Heavy-Duty SS Shooting Stainless Bolts
- Aesthetic Stainless Steel vault handle
- 5 Spoke handle available
- Superior 6 lever locking mechanism
- Double compartment customization available

Manual Key Dual Key Combination

EZEE SERIES

EZEE BLACK ₹ 5,490





EZEE BLACK (2 LTR)

Size (mm)	(H) 60 x (W) 190 x (D) 275
Size (inch)	(H) 2.36 x (W) 7.4 x (D) 11.02
Weight (Kg)	1.75 (Approx.)
Volume (Ltr.)	2.28

APPLICATION

Home Office Retail

Key Features:

- Digital keypad with touch screen
- User access with 4 to 15 Digits password
- Dual Password Option: User & Master
- Emergency Key available
- Low-Battery Indicator
- External Battery Back-up option
- Surface Finish: Scratch-resistant powder coating

Password Auto Freeze Emergency Key

EZEE SERIES

EZEE+ BLACK ₹ 6,590





EZEE+ (5.28 LTR)

Size (mm)	(H) 80 x (W) 280x (D) 350
Size (inch)	(H) 3.14 x (W) 11.20 x (D) 13.9
Weight (Kg)	3 (Approx.)
Volume (Ltr.)	5.28

APPLICATION

Home Office Retail

Key Features:

- Digital keypad with touch screen
- User access with 4 to 15 Digits password
- Dual Password Option: User & Master
- Emergency Key available
- Low-Battery Indicator
- External Battery Back-up option
- Surface Finish: Scratch-resistant powder coating

Password Auto Freeze Emergency Key

INDUSTRIAL HAZARD SAFES



APPLICATION

Office Warehouse Logistic Laboratory Hospital

OZ-ISC-SCD 410 LTR RED
Size(mm): (H)1650X(W)1500X(D)860
Weight: 270Kg approx

Key Features:

- Sturdy 1mm double-wall steel with 38mm of insulating air space
- Self-latching doors
- Fully welded and riveted construction
- Continuous piano hinge provides smooth closure
- Dual vents with built-in flash arresters placed at bottom & opposite top
- Safety shelves designed to handle incidental spills to back & bottom of leak proof sump

INDUSTRIAL HAZARD SAFES



Blue for
Corrosive Liquids

Red for
Combustible Liquids

Yellow for
Flammable Liquids

HxWxD (mm)	560x430x430	890x590x460	1650x590x460	1120x1090x460	1650x1090x460	1650x860x860	1650x1090x860	1650x1500x860
Capacity (Ltr.)	15	45	83	114	170	227	340	410
Weight (Kg.)	35	56	85	100	138	165	190	270
Adjustable Shelves (Pcs.)	1	1	2	1	2	2	2	2
Shelves Capacity (Kg.)	50	50	50	100	100	100	100	100
Door Type	Single Door	Single Door	Single Door	Double Door	Double Door	Double Door	Double Door	Double Door
Cabinet for Flammable Liquids - Item Code	OZ-ISC-15 Ltr Yellow	OZ-ISC-45 Ltr Yellow	OZ-ISC-83 Ltr Yellow	OZ-ISC-114 Ltr Yellow	OZ-ISC-170 Ltr Yellow	OZ-ISC-227 Ltr Yellow	OZ-ISC-340 Ltr Yellow	OZ-ISC-410 Ltr Yellow
Cabinet for Combustible Liquids - Item Code	OZ-ISC-15 Ltr Red	OZ-ISC-45 Ltr Red	OZ-ISC-83 Ltr Red	OZ-ISC-114 Ltr Red	OZ-ISC-170 Ltr Red	OZ-ISC-227 Ltr Red	OZ-ISC-340 Ltr Red	OZ-ISC-410 Ltr Red
Cabinet for Corrosive Liquids - Item Code	OZ-ISC-15 Ltr Blue	OZ-ISC-45 Ltr Blue	OZ-ISC-83 Ltr Blue	OZ-ISC-114 Ltr Blue	OZ-ISC-170 Ltr Blue	OZ-ISC-227 Ltr Blue	OZ-ISC-340 Ltr Blue	OZ-ISC-410 Ltr Blue
MRP/Unit	₹ 46,990	₹ 71,489	₹ 87,989	₹ 98,989	₹ 1,42,989	₹ 1,64,990	₹ 1,75,989	₹ 2,08,990

Note:-

International Offices

Melbourne, Australia
32-40 Tarnard Drive, Braeside VIC
3195, Tel: +61 1300 088 225
Mob +61 (0) 4 301 301 02
info@ozoneaustralia.com.au
www.ozoneaustralia.com.au

Dubai, UAE
OZONE MEA TRADING LLC
1344, Burjuman Business Tower
Dubai, UAE

Works

Ozone Overseas Pvt. Ltd.
Trilokpur Road, Kheri,
Nahan District-Sirmour
Kala Amb
Himachal Pradesh

For Security Solutions:

Gurugram*
#548 Udyog Vihar, Phase 5,
Sector 19, Gurugram,
Haryana-122016
Tel: +91-124-4961164, 65

Branch Offices

Ahmedabad
407, 4th Floor, Shivalik Abaise,
Opp. Shell Petrol Pump,
Prahaladnagar,
Ahmedabad – 380051
Tel: +91-079-29706789

Bengaluru*
No. 424, 2nd Floor, Above
HDFC Bank,
Passport Office Road, 6th block,
Koramangala, Bangaluru - 560034
Tel: +91-80-41207539
blrhub@ozone-india.com

Chandigarh
SCO 907, NAC Mani Majra
Near Solitaire Hotel,
Chandigarh - 160101
Mob: +91-9316001154

Chennai*
1-A, Jasoda Apartments,
No: 12, Ground Floor, Bank Street,
Kilpauk,Chennai - 600010.
Tel: 044-43802063
chennaihub@ozone-india.com

Cochin
No. 737/11, Opp. Lotus Club,
Warriam Road, Eranakulam, Cochin
Kerala - 682016
Mob: +91-7291981739

Hyderabad
Unit # 704, 7th Floor,
Shangrila Plaza,
Road No. 2, Banjara Hills,
Hyderabad - 500034

Indore
503, B Block,
Prakrati Corporate,
Y N Road, Indore - 452001
Mob: +91-9589589902

Jaipur
27, 5th Floor, Mahima Trinity Mall,
Swej Farm, New Sanganer Road,
Jaipur-302019
Tel: +91-141-2294261
jaipurhub@ozone-india.com

Kolkata
4 Govt Place, 4th floor,
Room No:- 4H
Delta House. Kolkatta - 700001
Mob: +91-9831176481

Lucknow*
Ground Floor,
Eldeco Corporate Chambers,
Vibhuti Khand, Gomti Nagar,
Lucknow - 226010
Tel: +91-0522-4109647
Mob: +91-9794970000

Mumbai
The Avenue, 607,
Near Waterstones Hotel,
Int. Airport Road,
Marol, Andheri (E),
Mumbai - 400059
Tel : +91-22-28306453
Mob: +91-7045775977

Pune
#105, 1st Floor, Suyog Center
Market Yard, Gultekdi,
Pune – 411037
Mob: +91-7678117567

Surat
201, Luxuria Business Hub,
Nr.V.R.Mall, Surat-Dumas Road, New
Magdalla Road,
Surat - 395007
Mob: +91-9724009921

Visakhapatnam
Door No 48-3-39, Sarayu Residency
Srinagar, Opp. Day and Night
Hospital, Visakhapatnam
A.P. 530016
Mob: +91-9515156438

*Also Operation Office

COPYRIGHT© DECEMBER 2023 #1.1_A6 OZONE OVERSEAS PVT. LTD.

Download Ozone India App

Visit Website | Android | IOS

Specifications subject to change without notice

OZONE®
FOR A SAFER WORLD

Corporate Office: H-40, Bali Nagar, New Delhi - 110015, INDIA

Operations Office: Ozone Secutech Pvt. Ltd. Registered Office: H-38, Bali Nagar, New Delhi-110015, India

Visit: www.ozonesecutech.com | Email: info@ozonesecutech.com | Customer Care: +91-9310012300